BATTERY

RENOGY

SMART LITHIUM IRON PHOSPHATE

12V 100Ah

Version 2.1

⚠ Important Safety Instructions ⚠

Please save these instructions.

This manual contains important installation, operation, and maintenance instructions for the Smart Lithium Iron Phosphate Battery. Please observe these instructions and keep them located near the battery for further reference. The following symbols are used throughout the manual to indicate potentially dangerous conditions or important safety information.

WARNING	Indicates a potentially dangerous condition. Use extreme caution when performing this task.
CAUTION	Indicates a critical procedure for the safe and proper installation and operation of the battery.
NOTE	Indicates a procedure or function that is important to the safe and proper installation and operation of the battery.

Disclaimer

The manufacturer accepts no liability for any damage caused by:

- Force majeure including fire, typhoon, flood, earthquake, war, and terrorism.
- Intentional or accidental misuse, abuse, neglect or improper maintenance, and use under abnormal conditions.
- Improper installation, improper operation, and malfunction of a peripheral device.
- Contamination with hazardous substances, diseases, vermin, or radiation.
- Alterations to the product without express written consent from the manufacturer.

General Safety Information

WARNING

- Please keep the battery away from water, heat sources, sparks, and hazardous chemicals.
- DO NOT puncture, drop, crush, burn, penetrate, shake, or strike the battery.
- DO NOT open, dismantle, or modify the battery.
- DO NOT touch any terminals or connectors.
- DO NOT touch the exposed electrolyte or powder if the battery casing is damaged.
- Uncovered electrolyte or powder that has contacted the skin or eyes MUST be flushed out with plenty of clean water immediately. Seek medical attention afterwards.

- Please make sure any battery charger or charge controller has been disconnected before working on the battery.
- DO NOT connect or disconnect terminals from the battery without first disconnecting loads.

CAUTION

- DO NOT place tools on top of the battery.
- Please keep the battery out of the reach of young children.
- Please wear proper protective equipment when working on the battery.
- Please use insulated tools when working on battery.
- DO NOT wear jewelry or other metal objects when working on or around the battery.
- Please ensure adequate and secure mounting of the battery.
- Please use suitable handling equipment for safe transportation of the battery.
- DO NOT dispose of the battery as household waste. Please use recycling channels in accordance with local, state, and federal regulations.

Table of Contents

General Information 04

Key Features 04

Product Overview 05

Identification of Parts 05

Dimensions 05

Additional Components 06

Preparation 06

Battery Installation 06

Inspection 07

Cable Sizing 07

Connecting Batteries in Banks 08

Securing Cable Connections 09

Installation Environment 09

Battery Operation 10

Battery Maintenance 12

Battery Storage 13

Battery Management System 14

Troubleshooting 16

Specifications 17

General Information

The Renogy Smart Lithium Iron Phosphate Battery enables the auto-balancing among parallel connections and provides more flexibility for the battery bank configuration. The integrated battery management system (BMS) not only protects the battery from various abnormal conditions but monitors and manages the charging and discharging process. The state-of-the-art battery cells ensures an extended cycle life and exceptional discharge performance.

Key Features

- **Auto-Balance**
  Connects multiple batteries in parallel safely with the auto-balancing function to meet the power and energy requirements of different system setups.
- **Ultra-Safety**
  The battery management system (BMS) provides comprehensive protection to the battery and manages the charging and discharging process.
- **Uncompromised Quality**
  The state-of-the-art battery cells ensure an exceptional lifespan of more than 4000 cycles (80% DOD), up to 100A continuous discharge current, and a wide range of operating temperatures.
- **Communication Port**
  The communication ports enable the communication between connected batteries, external devices, and host computers.

Product Overview

Identification of Parts

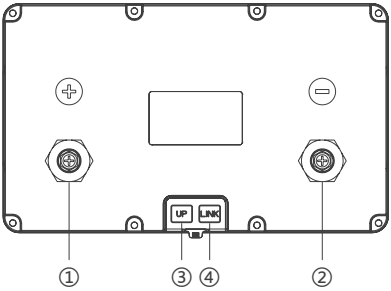

① Positive Terminal

② Negative Terminal

③ RS485 UP Communication Port

④ RS485 LINK Communication Port

Dimensions

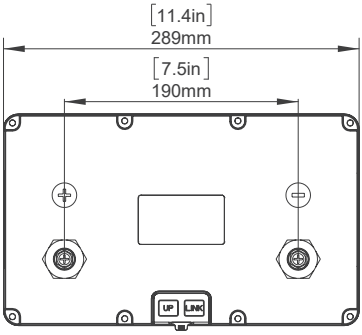

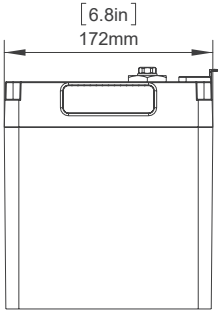

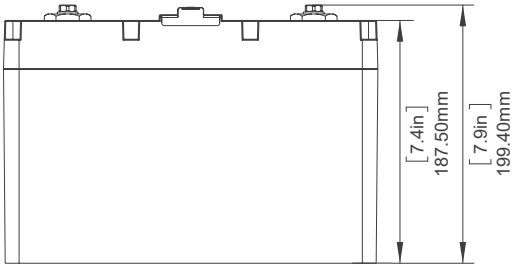

Additional Components

- **Activation Switch**
  The Activation Switch is used to switch the battery between active mode and shelf mode.

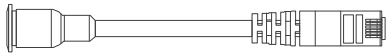

- **Long Terminal Bolts (2)**
  The Long Terminal Bolts (M8 x 1 x 20 mm) are used to secure multiple cable lugs on a single battery terminal.

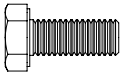

Preparation

Before the installation and operation of the battery, it is recommended to have the following equipment or tools available:

- Proper Protective Equipment
- Insulated Tool(s)
- Multimeter
- Battery Cable
- Battery Charger / Charge Controller

Battery Installation

Safe and reliable installation requires trained and certified technicians. Therefore, the purpose of this section is only to serve as a guideline as all scenarios cannot be covered.

WARNING

- DO NOT short-circuit the battery terminals. Doing so can cause current bursts and lead to irreversible damage to the system and the battery.

- Please verify the polarity before connecting the wiring. Reversing polarity can and will destroy the battery.
- Please use circuit breakers, fuses, or disconnects appropriately sized by a certified electrician, licensed installers, or regional code authorities to protect all electrical equipment.

Inspection

Please check for visible damage including cracks, dents, deformation, and other visible abnormalities. The top of the battery and terminal connections should be clean, free of dirt and corrosion, and dry. If any problems are detected with the battery, please contact us for assistance. Refer to the last page of the manual for contact information.

Cable Sizing

Battery cables (sold separately) should be appropriately sized to handle the expected load. Please refer to the following table for the ampacities of copper cables with different gauge sizes.

Copper Cable Gauge Size (AWG/mm²)	Ampacity (A)
14 (2.08)	20
12 (3.31)	25
10 (5.25)	35
8 (8.36)	50
6 (13.3)	65
4 (21.1)	85
2 (33.6)	115
1 (42.4)	130
1/0 (53.5)	150
2/0 (67.4)	175
4/0 (107)	230

The above values are from the NEC Table 310.15(B)16 for copper cables rated at 75°C (167°F), operating at an ambient temperature of no more than 30°C (86°F). Lengths in excess of 6 feet (1829 mm) may require heavier gauge cable to avoid excess voltage drop in undersized wiring.

Connecting Batteries in Banks

WARNING

- DO NOT string batteries in series. Doing so can cause catastrophic failure.

CAUTION

- DO NOT string batteries with different chemistries, brands, models, rated capacities, or nominal voltages in parallel.
- Please avoid too high a voltage difference between paralleled batteries, despite the auto-balancing function, to avoid triggering the over-current protection.
- In parallel battery banks, the cables between each battery should be of equal length to ensure that all batteries in the system can work equally together.
- It is not recommended to connect more than 4 batteries in parallel if taking advantages of the auto-balancing function.

To string multiple batteries in parallel, first connect the Positive Terminals of the batteries to each other. Then, connect the Negative Terminals of the batteries to each other. Finally, connect the Positive Terminal of the first battery and the Negative Terminal of the last battery to the system. This type of arrangement is used to increase the overall battery capacity while keeping the battery voltage the same.

To enable the communication between paralleled batteries for the proper operation of the Renogy Monitoring Screen or the Renogy Bluetooth Module, connect the RS485 LINK Communication Ports of the former batteries to the RS485 UP Communication Ports of the latter ones using CAT5 (or above) Ethernet straight through cables (not included). The Renogy Monitoring Screen or the Renogy Bluetooth Module should be connected to the RS485 UP Communication Port of the first battery.

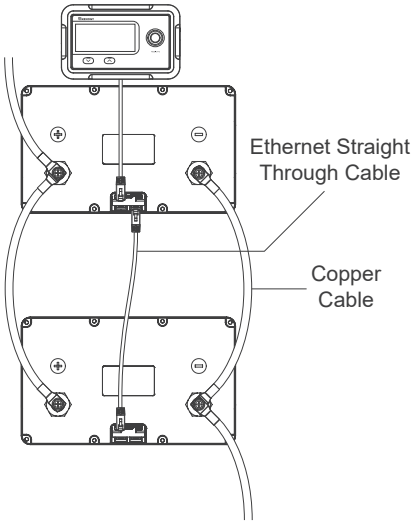

Securing Cable Connections

CAUTION

- Please secure all cable connections to the proper specification in order to ensure good contact between the cable lugs and the terminals. Over-tightening cable connections can cause terminal breakage and loose cable connections can cause terminal meltdown or fire.
- Please use an insulated Philips screwdriver to tighten the cable connections.

To ensure good contact between the cable lugs and the terminals, please use the appropriate number of washers to allow for as much thread engagement as possible without bottoming out the terminal bolt. The correct number of washers can be determined by hand-tightening the terminal bolt with just the cable lug in place and observing the gap that is present. Use the number of washers needed so that the washer stack is slightly larger than the observed gap.

It is important to ensure that the cable lug and the top surface of the terminal are in contact. The washer(s) must be placed on top of the lug. Do not place the washer(s) between the battery terminal and the cable lug as this can cause high resistance and excessive heating.

NOTE

- Please use the included Long Terminal Bolts when needed to secure multiple cable lugs on a single battery terminal.

Installation Environment

The battery should be installed in a clean, cool, and dry place, keeping water, oil, and dirt away from the battery. The accumulation of these materials on the battery can cause current leakage, resulting in self-discharge and a possible short-circuit. Sufficient air flow must be provided to prevent excessive heat build-up and to minimize temperature variation between the batteries.

Battery Operation

CAUTION

- DO NOT over-charge or over-discharge the battery.
- DO NOT charge the battery at low temperatures below 0°C (32°F) and discharge the battery at high temperatures above 140°F (60°C).

Activation Switch Operation

The battery can be switched between active mode and shelf mode with the Activation Switch. When the battery is in shelf mode, connect the Activation Switch to the RS485 UP Communication Port of the battery and press the Power Button. The dim blue LED light on the Power Button will become bright blue to indicate that the battery has been successfully switched to active mode. Please check the battery voltage to validate an active battery.

Prior to long periods of storage, disconnect the battery from the system, connect the Activation Switch to the RS485 UP Communication Port of the battery, and long press the Power Button for 3 seconds to switch the battery to shelf mode. The bright blue LED indicator will become dim blue to indicate that the battery has been switched to shelf mode. In shelf mode, the battery has a low self-discharge rate and can hold the charge for a longer period of time.

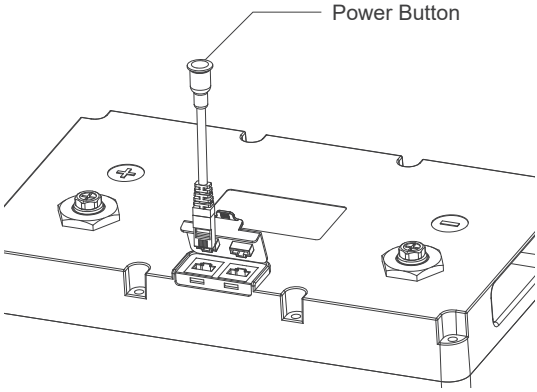

CAUTION

- Please leave the battery in shelf mode during installation. DO NOT switch the battery to active mode until making sure that all the connections are correct and secure. Connecting active batteries to the system may trigger the short circuit protection of the battery.

NOTE

- The battery leaves the factory in shelf mode. Please switch the battery to active mode by charging it or using the Activation Switch after connecting the battery to the system for the first time.
- Paralleled batteries can be switched to active mode simultaneously by charging them or using the Activation Switch on any battery. To switch paralleled batteries to shelf mode simultaneously, please enable the communication between paralleled batteries and use the Activation Switch on the first battery. Otherwise, please disconnect paralleled batteries and use the Activation Switch to switch each battery to shelf mode.

Charging Batteries

CAUTION

- DO NOT exceed the maximum charge current to the battery.
- ONLY charge the battery with a battery charger or charge controller that is compatible with lithium iron phosphate batteries.

NOTE

- Depending on the length of time between manufacturing and shipping, the battery may be received at a partial state of charge. Please fully charge the battery prior to the initial use.

During the standard charging process, the battery is first charged at a constant current of 20A until the battery voltage reaches 14.4V. Then, the battery is charged at a constant voltage of 14.4V while tapering the charge current. The standard charging process is considered complete when the charge current is less than 2A. However, leaving the battery on float will continue to balance the battery cells and will not damage the battery. The standard charging process normally takes 7 hours. Safe charging requires battery temperatures between 32°F and 131°F (0°C and 55°C).

Discharging Batteries

CAUTION

- DO NOT exceed the maximum discharge current to the battery.
- DO NOT connect large loads to the battery when it is running low.
- If the battery shuts off due to low state of charge (SoC), please disconnect the battery from the discharge equipment to eliminate potential parasitic loads and charge the battery as soon as possible. Failure to do so may cause irreversible damage to the battery.

- It is recommended to pair the battery with discharge equipment featuring low voltage disconnect in the system.

During the standard discharging process, the battery is discharged at a constant current of 20A until the battery voltage reaches 10V. Safe discharging requires battery temperatures between -4°F and 140°F (-20°C and 60°C).

Battery Maintenance

Inspection

Please perform regular inspections following these steps:

- Examine the external appearance of the battery. The top of the battery and terminals should be clean, dry, and free of corrosion.
- Check battery cables and connections. Replace any damaged cables and tighten any loose connections.

CAUTION

- Terminal corrosion may adversely affect the battery performance and present a safety hazard. Please keep terminals free of corrosion.

Cleaning

Please clean the battery at regular intervals following these steps:

- Disconnect the battery from the charging source or electric load.
- Switch the battery to shelf mode using the Activation Switch.
- Clean the top of the battery and terminals with a damp cloth or non-metallic brush. A household cleaner may be used if the battery is extremely dirty.
- Dry the battery with a clean cloth and keep the area around the battery clean and dry.
- Ensure the battery is completely dry before switching it to active mode and/or reconnecting it to the charging source or electric load.

Checking Voltage

Please check the battery voltage periodically to assess battery health. If the battery resting voltage is under 10V in active mode at room temperature, the battery may have been over-discharged due to self-discharge or parasitic loads. Please stop using the battery until the fault can be corrected and the battery can be charged.

Battery Storage

Please follow these tips to ensure that the battery emerges from storage in a good condition:

- Charge the battery to 30%~50% and switch the battery to shelf mode using the Power Button.
- Disconnect the battery from the discharge equipment to eliminate any potential parasitic loads that may discharge the battery.
- Store the battery in an open, well ventilated, dry, clean area in temperature between -13°F~149°F (-25°C~65°C).
- Handle the battery carefully to avoid sharp impacts or extreme pressure on the battery casing.
- Charge the battery at least once every 3~6 months to prevent over-discharge.
- When the battery is taken out of storage, it should be given a full charge prior to use.

CAUTION

- DO NOT expose the battery to the extreme temperatures over 149°F (65°C).
- DO NOT expose the battery to heat sources.
- DO NOT expose the battery to direct sunlight, moisture, or precipitation.

Battery Management System

Warning and Protection

The battery contains a battery management system (BMS) that warns you and protects the battery from over-voltage, under-voltage, over-current, short circuit, high temperature, and low temperature. Please refer to the following table for the triggering and recovery condition of each warning and protection.

Battery Operation Status		Condition	
Battery Over-voltage	Protection	Triggering	Battery Voltage≥14.8V
		Recovery	Battery Voltage≤13.8V / Discharge Current≥1A
Battery Cell Over-voltage	Protection	Triggering	Battery Cell Voltage≥3.7V
		Recovery	Battery Cell Voltage≤3.45V / Discharge Current≥1A
Battery Under-voltage	Warning	Triggering	Battery Voltage≤12V
		Recovery	Battery Voltage≥12V
	Protection	Triggering	Battery Voltage≤10V
		Recovery	Battery Voltage≥12.4V / Charge Current≥1A
Battery Cell Under-voltage	Warning	Triggering	Battery Cell Voltage≤3V
		Recovery	Battery Cell Voltage≥3.1V / Charge Current≥1A
	Protection	Triggering	Battery Cell Voltage≤2.5V
		Recovery	Battery Cell Voltage≥3.1V / Charge Current≥1A
Battery High Temperature (Charging)	Warning	Triggering	Battery Temperature≥122°F (50°C)
		Recovery	Battery Temperature≤113°F (45°C)
	Protection	Triggering	Battery Temperature≥131°F (55°C)
		Recovery	Battery Temperature≤122°F (50°C)
Battery High Temperature (Discharging)	Warning	Triggering	Battery Temperature≥122°F (50°C)
		Recovery	Battery Temperature≤113°F (45°C)
	Protection	Triggering	Battery Temperature≥140°F (60°C)
		Recovery	Battery Temperature≤122°F (50°C)
Battery Low Temperature (Charging)	Warning	Triggering	Battery Temperature≤41°F (5°C)
		Recovery	Battery Temperature≥50°F (10°C)
	Protection	Triggering	Battery Temperature≤32°F (0°C)
		Recovery	Battery Temperature≥41°F (5°C)

Battery Low Temperature (Discharging)	Warning	Triggering	Battery Temperature≤14°F (-10°C)
		Recovery	Battery Temperature≥23°F (-5°C)
	Protection	Triggering	Battery Temperature≤-4°F (-20°C)
		Recovery	Battery Temperature≥1.4°F (-17°C)
Charge Over-current	Warning	Triggering	Charge Current≥60A
		Recovery	Charge Current≤55A
	Primary Protection	Triggering	Charge Current≥100A
		Recovery	Charge Current≤55A
	Secondary Protection	Triggering	Charge Current≥120A
		Recovery	Charge Current≤55A
Discharge Over-current	Warning	Triggering	Discharge Current≥110A
		Recovery	Discharge Current≤105A
	Primary Protection	Triggering	Discharge Current≥130A
		Recovery	Discharge Current≤105A
	Secondary Protection	Triggering	Discharge Current≥150A
		Recovery	Discharge Current≤105A
Short Circuit	Warning	Triggering	Discharge Current≥500A (Delay 300μs)
		Recovery	Remove Short Circuits / Charge Current≥1A

NOTE

- The warning status is only visible on the Renogy Monitoring Screen and the DC Home app.
- The warning status will not affect the normal use of the battery. But it is recommended to pay closer attention to the battery to prevent it from entering the protection mode.

Battery Cell Balancing

The battery employs bypass circuit to maintain the balance between each battery cell group. Each battery cell group is connected with a bypass resistor and a switch in parallel. During the charging process, if the highest-voltage battery cell group reaches the set balancing starting voltage and the voltage difference between the highest-voltage and the lowest-voltage battery cell group exceeds the set voltage difference, the switch connected to the highest-voltage battery cell group will be closed to shunt the charge current around the highest-voltage battery cell group through the bypass resistor until the voltage difference drops below the set value. To avoid excessive energy loss, the battery cell balancing is only performed during the charging process.

Troubleshooting

If any problems occur during the battery operation, please refer to the following instructions or contact us for assistance:

- If the Activation Switch is not able to switch the battery to active mode or the battery resting voltage is under 10V in active mode at room temperature, the battery may have been severely over-discharged due to self-discharge or parasitic loads. Please revive the battery using a battery charger or charge controller with the lithium battery activation function.
- If the battery terminal voltage shows 0V in active mode, the battery internal fuses may have blown due to severe over-current. Please contact us for assistance.
- If the battery voltage gets too low to reliably power electric loads or triggers the battery under-voltage protection, please disconnect the battery from electric loads and charge the battery as soon as possible.
- If the battery temperature gets too high/low during the operation and triggers the battery high/low temperature protection, please disconnect the battery from the charging source and electric loads and cool down/warm up the battery to room temperature. The battery will automatically recover from the battery high/low temperature protection.
- If too high a current passes through the battery and triggers the charge/discharge over-current protection, please disconnect the battery from the charging source/electric load immediately. The battery will automatically recover from the charge/discharge over-current protection.
- If the battery is short circuited and triggers the short circuit protection, please remove the short circuit immediately and charge the battery with a current greater than 1A to recover the battery from the short circuit protection.

Specifications

General	
Cell Type	LiFePO4
Rated Capacity (0.2C)	100Ah
Nominal Voltage	12.8V
Voltage Range	10V~14.8V
Cycle Life (0.2C, 25°C)	4000 Cycles (80% DOD)
Insulation Resistance	500VDC, ≥10MΩ
Dimension	11.4 x 6.8 x 7.4 inch / 289 x 172 x 188 mm
Weight	26 lb. / 11.8 kg
Communication Port	RJ45 (RS485 Protocol)
Connection Method	Parallel
Terminal Bolt Size	M8 x 1 x 15 mm
Recommended Terminal Torque	62.0~70.8 inch·lb / 7~8 N·m
Certifications	UN38.3, MSDS, CE, FCC, PSE, UL (Battery Cell), TUV (Battery Cell)
Operating Parameters	
Charge Voltage	14.4V
Maximum Continuous Charge Current	50A
Maximum Continuous Discharge Current	100A
Standard Operating Temperature	77°F±9°F / 25°C±5°C
Charge Temperature Range	32°F~131°F / 0°C~55°C
Discharge Temperature Range	-4°F~140°F / -20°C~60°C
Storage Temperature Range	-13°F~149°F / -25°C~65°C
Relative Humidity	5%-95%
Altitude	≤4000m

RENOGY

RENOGY.COM

Renogy reserves the right to change
the contents of this manual without notice.

US
2775 E Philadelphia St, Ontario, CA 91761, USA
909-287-7111
www.renogy.com
support@renogy.com

CN
苏州高新区科技城培源路1号5号楼-4
400-6636-695
https://www.renogy.cn
support@renogy.cn

JP
https://www.renogy.jp
supportjp@renogy.com

CA
https://ca.renogy.com
supportca@renogy.com

AU
https://au.renogy.com
supportau@renogy.com

UK
https://uk.renogy.com
supportuk@renogy.com

DE
https://de.renogy.com
supportde@renogy.com