SPECIFICATIONS

C-SERIES 1000

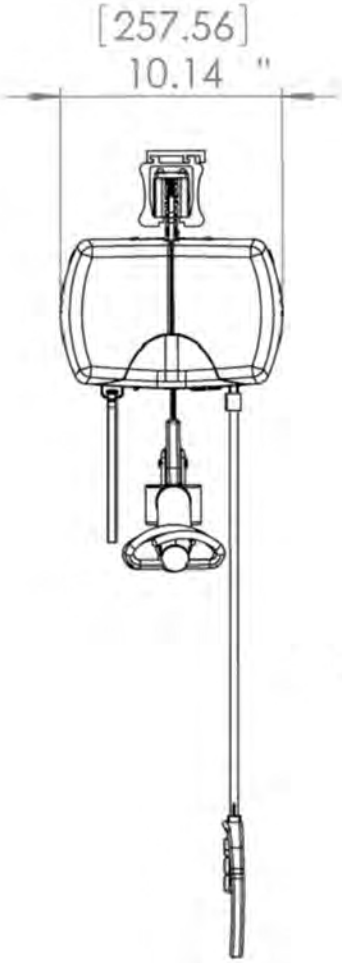

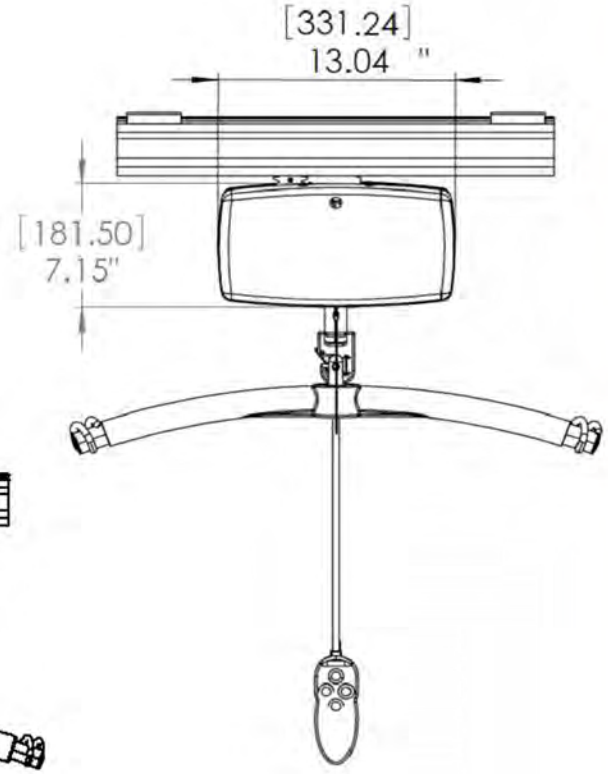

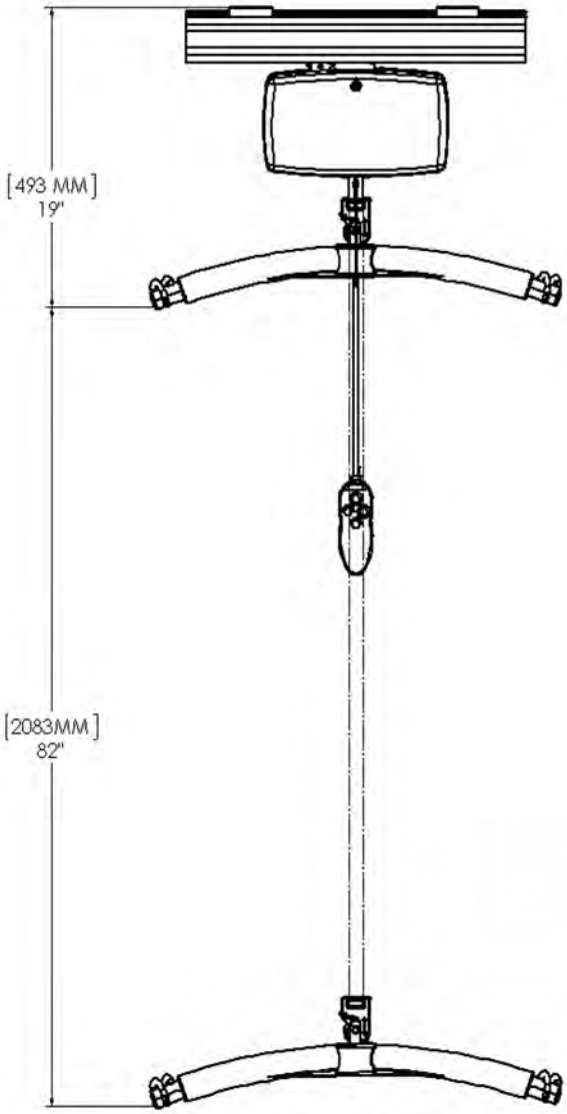

Lifting Range

SMT Health Systems