NEFF

COOKING PASSION SINCE 1877

NEFF APPLIANCE RANGE BROCHURE

Cooking inspires people. People inspire us.

2020

INTRODUCTION TO NEFF

Cooking inspires people. People inspire us.

At NEFF we believe that the kitchen is the heart of every home. A place to eat, meet and get creative with your cooking. With an extensive range of innovative appliances, we're constantly working to meet the demands of every lifestyle. From our unique Slide&Hide® disappearing oven door to our revolutions in steam cooking, a NEFF kitchen is equipped for even the trickiest dishes.

CONTENTS

HOME CONNECT	**4-5**
OVENS FOR EVERY COOKAHOLIC	**6-7**
OVENS – THE COLLECTION	**8-15**
COMPACT APPLIANCES & COMBINATIONS	**16-18**
THE PERFECT COMBINATION	**19**
COOKING WITH A NEFF OVEN	**20-21**
OVENS	**22-37**
Slide&Hide® Pyrolytic Ovens with Vario Steam	22-23
Slide&Hide® Ovens with Added Cleaning	22-23
Slide&Hide® Single Ovens with Full Steam	24-25
Slide&Hide® Single Ovens with Vario Steam	24-25
Slide&Hide® Single Ovens	24-25
Single Pyrolytic Ovens	26-27
Single Ovens	26-27
Compact Combination Ovens with Full Steam	28-29
Compact Coffee Centre	29
Compact Ovens with Microwave and Microwave Combination Ovens	30-31
Microwave Ovens	32-33
Warming and Vacuum Drawers	34-35
Built-in Double Ovens with CircoTherm®	36-37
HOBS	**38-71**
Venting Hobs	52
Flex Induction Hobs	53-57
Induction and Ceramic Hobs	58-61
Domino Hobs	62-63
Gas Hobs	64-71
EXTRACTOR HOODS	**72-105**
Worktop Installation	84-85
Ceiling Installation	86-87
Island Hoods	88-89
Wall Installation	90-93
Glass Chimney Hoods	94-95
Box Chimney Hoods	96-97
Pyramid Chimney Hoods	98-99
Telescopic Hoods	100-101
Canopy Hoods	102-103
Integrated Furniture Installation	104-105
COOLING	**108-129**
American-style Fridge Freezers	116-117
Built-in Fridge Freezers	118-121
Built-in Single Door Fridges and Freezers 177cm	122-123
Built-in Single Door Fridges and Freezers 140cm	124-125
Built-in Single Door Fridges and Freezers 122cm	124-125
Built-in Single Door Fridges and Freezers 102cm	126-127
Single Door Fridges and Freezers 87cm	126-127
Built-under Single Door Fridges and Freezers 82cm	128-129
DISHWASHERS	**130-143**
Fully Integrated Dishwashers	136-139
Semi-integrated Dishwashers	140-141
SlimLine Dishwashers	142
LAUNDRY	**144-149**
Integrated Laundry	146-147
Freestanding Laundry	148-149
INSTALLATION GUIDE	
NEFF CUSTOMER SERVICE	

HOME CONNECT

Rethink cooking in NEFF's infinite kitchen

Cooking at its best has always been a sociable experience in which the kitchen works in concert to support cooks in living out their creativity. We've taken the connected kitchen one step further: now you can manage your oven, fridge, dishwasher and other home appliances with Wi-Fi and Home Connect. Tap via the app, speak to your oven with voice control and make appliances interact with one another automatically. And these are just a few examples of what Home Connect makes possible.

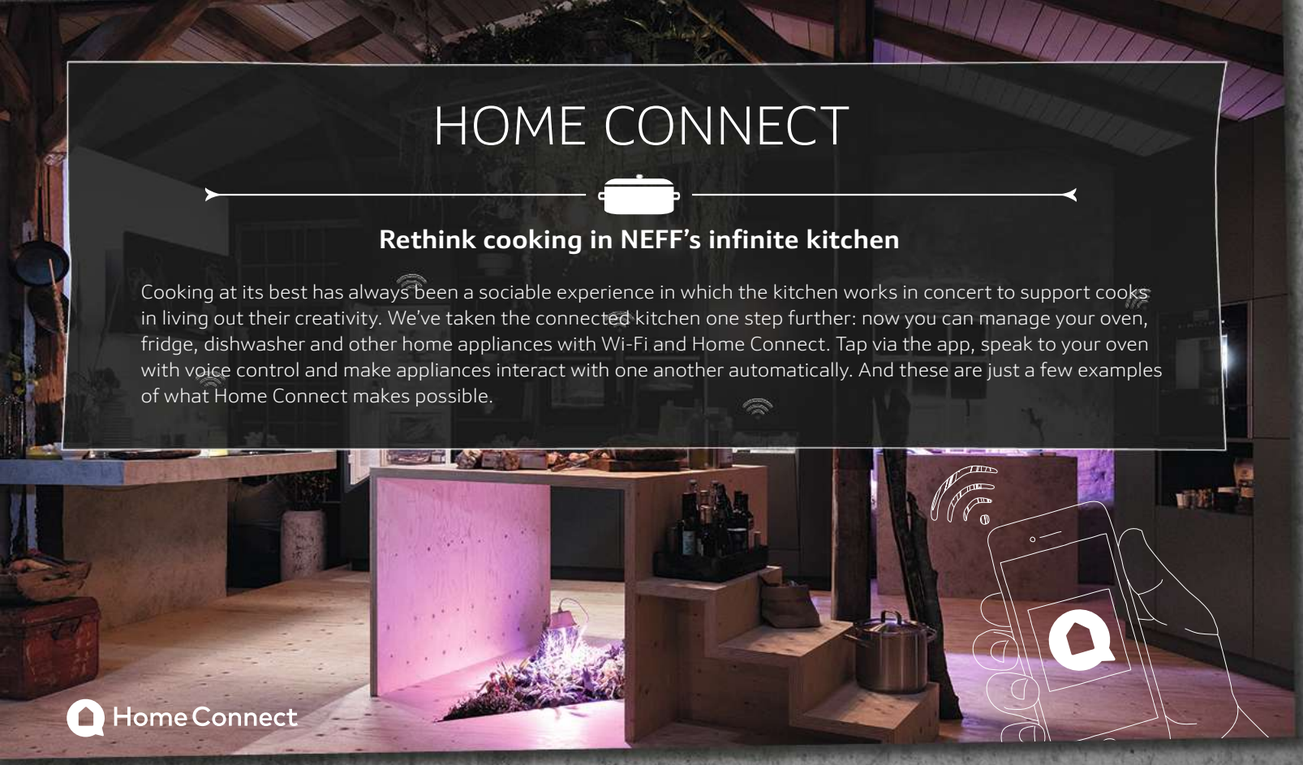

COMMUNICATE WITH YOUR OVEN

START COOKING WITH THE APP AND GET NOTIFIED WHEN DINNER IS READY

For many Cookaholics, talking to their oven comes naturally. With your hands full kneading dough and rolling it out for tagliatelle, it's more than handy to start the oven and select the relevant cooking function hands-free via voice control. Our oven can talk back too: with Home Connect you can expect to receive a notification directly to your smartphone when dinner is ready. So you can focus on entertaining your guests.

A WORLD OF INSPIRATION

With the Home Connect app, you can manage and set up your appliance routines that support you in the kitchen. Furthermore, the app also contains a bank of inspiring ideas and recipes tailored for any Cookaholic that loves original and fresh cooking.

WAKE UP AND SMELL THE COFFEE

YOUR FAVOURITE COFFEE AND MUSIC ARE WAITING FOR YOU IN THE KITCHEN

Just say the word and your favourite coffee will be ready in no time. If you integrate voice control into your connected kitchen, you can add an automatically prepared coffee to your morning routine and order the coffee from another room. A voice command is all it takes to get the day started with motivational music while sipping your espresso or flat white. On the subject of coffee, don't forget to use your coffee grounds to grow mushrooms – delicious when grilled.

KEEP YOUR HANDS ON THE COOKING

LET THE HOOD JUDGE THE EXTRACTION YOU NEED

When you and your hob are causing a steam storm in the kitchen, our Automatic Hood springs to life as the two appliances are connected via Wi-Fi. The hood automatically adapts the extraction rate to the cooking aromas and vapours it detects. If desired, you can even adjust the extraction via the Home Connect app or using the stylish TwistPadFire® dial on the cooktop – there's a control option to suit any mood.

LIGHT TO SUIT YOUR TASTE

Change the light in the kitchen to suit your mood. Depending on the situation, you can go from cool blue to romantic red with our hood's Ambient Light. Choose your tone via the Home Connect app.

IT'S SUPER COOL TO CONNECT

OUR WIFI-CONNECTED FRIDGE IS READY WHEN YOU ARE

Maybe you're at the supermarket doing a big shop and need to pre-cool the fridge so your groceries are chilled quicker. Or you've bought drinks for a party and need them to be cooled on time. With Super Cooling, you can get your fridge down to temperature before you get home – a few taps in the app is all it takes.

KEEP TABS ON YOUR DETERGENT

Let Home Connect keep track of how many dishwasher tabs you've used and remind you when you're running low. Never be caught short again!

ONE TAP AND THE DISHWASHER DOES THE REST

A VOICE COMMAND OR A TAP ON YOUR SMARTPHONE IS ALL IT TAKES

Activating the Home Connect capabilities means that your dishwasher will become much more helpful – use easy start and let NEFF choose the best programme and never worry about running out of dishwasher tablets – it will monitor the number of cycles and even help with the shopping using Amazon DRS.

AN OVEN FOR EVERY COOKAHOLIC

Our ovens are designed by cooks, for cooks. We're proud of our strong aesthetic values and our ovens look as great on the outside as they work on the inside. But what makes NEFF stand out is our commitment to providing a better cooking experience.

At NEFF, we appreciate that every customer has a unique set of requirements. We've done our best to make our oven range as varied as possible to suit every kitchen. There are three types of ovens in the NEFF collection, single, compact and double ovens.

SINGLE OVENS

Your versatile kitchen companion

NEFF's iconic CircoTherm® hot air system is fitted as standard on all single ovens. It's then up to you to choose from the other features to suit your cooking style. Use your voice with Home Connect, let our Pyrolytic Self-Cleaning models make cleaning up after your creations a breeze. And if you want the benefits that steam offers, choose a model with Vario Steam, Full Steam or Added Steam.

Featured model:
B58VT68H0B N90 Slide&Hide® Single Pyrolytic Oven with Home Connect

Featured model:
C18FT56H0B N90 Compact Steam Oven with Home Connect

THE BEAUTY OF A MICROWAVE COMBINATION MODEL IS THAT IT CAN MIMIC ALL THE BENEFITS OF A TRADITIONAL OVEN IN A FRACTION OF THE TIME.

COMPACT OVENS

SEAMLESS COMBINATION MEETS ADVENTUROUS COOKING

Intended to complement our unique Slide&Hide® Oven range, our innovative 45cm Compact Ovens provide additional cavity space whilst offering a premium and seamless kitchen design. Use our SeamlessCombination® mounting kits to create your very own stylish 'mix and match' appliance wall. Our SeamlessCombination® mounting kits are only available within the N90 and N70 Collections.

Designed to offer the ultimate flexibility, our compact appliances provide all of the innovative features you'd expect from a NEFF Single Oven. With CircoTherm® as a standard across most Compact Ovens, multiple dishes can be cooked simultaneously without any intermingling of flavours. Plus, selected models offer our innovative Pyrolytic Self-Cleaning function to make oven cleaning a chore of the past.
If you're looking to push the boundaries with creative cooking our Compact Full Steam and Compact Microwave Ovens is a must have appliance for your kitchen. Pair one of our Compact Ovens with a Single Slide&Hide® Oven to create a more versatile and larger cooking capacity than a standard Double Oven offers. Head to page 16 to discover how our small ovens have big ideas.

DOUBLE OVENS

DOUBLE THE SPACE, DOUBLE THE COOKING

With the convenience of two oven cavities, our built-in Double Ovens provide any Cookaholic with plenty of cooking space without impacting on kitchen design. Featuring NEFF's CircoTherm® technology in the main oven and Pyrolytic Self-Cleaning in both, it's possible to cook different dishes on multiple levels without any intermingling of flavours or mess to clean up.

Featured model:
U2ACM7HN0B N50 Pyrolytic Double Oven

BUILT-UNDER DOUBLE OVENS

Our built-under Double Ovens remain a popular choice for cooks who have limited space with unlimited ideas. Featuring a main oven with our unique CircoTherm® hot air technology, it's possible to cook different dishes across multiple levels and everything will come out tasting like it should. Our built-under Double Ovens are ideal for cooks who need the flexibility of a double oven, but have limited space in their kitchen.

Featured model:
J1ACE4HN0B N50 Built-Under Double Oven

THE COLLECTION

Choosing the right appliance to complement your kitchen and lifestyle can be challenging. To help you select the perfect kitchen companion, we've introduced easy-to-follow Collections based on product features, technology, design and simplicity. There's a Collection to suit everyone.*

N 90

FEATURES

THIS COLLECTION CAN INCLUDE*:-

- Slide&Hide® with Home Connect
- Slide&Hide® door with Rotating Handle
- Full Touch Control 5.7" inch
- Medium Shift Control 4.1" inch
- Full Steam
- NEFFLight®
- Vario Steam
- Pyrolytic Self-Cleaning
- CircoTherm®
- SeamlessCombination®
- Multi Point Meat Probe
- ComfortFlex Rails

Full Touch Control display; 5.7" high resolution TFT colour graphics display

Medium Shift Control; 4.1" high resolution TFT colour graphics display

For more information on the features listed in our Collections visit **neff-home .com/uk/**

N 70

FEATURES

THIS COLLECTION CAN INCLUDE*:-

- Slide&Hide® door with Rotating Handle
- Small Shift Control 2.5" inch
- Vario Steam
- Pyrolytic Self-Cleaning
- CircoTherm®
- SeamlessCombination®

Small Shift Control; 2.5" high resolution TFT colour graphics display

N 50

FEATURES

THIS COLLECTION CAN INCLUDE*:-

- Slide&Hide® with Home Connect
- Slide&Hide® with Rotating or Fixed Handle, depending on the model
- Added Steam
- Medium LCD White Electronic Control
- Small LCD White display
- Pyrolytic Self-Cleaning
- CircoTherm®
- Single Point Meat Probe
- ClipRails

Medium LCD White electronic display

Small LCD White display

DESIGN COORDINATION

Achieving a premium, seamless kitchen has never been easier

At NEFF, we appreciate that every customer has a unique set of requirements when it comes to designing the kitchen of their dreams. Choosing the right appliances to reflect your own cooking and design style is often overwhelming. That's why NEFF is on hand to help you achieve that all important premium look by grouping products across all categories into 3 unique Collections.

Defined by the unique Slide&Hide® Oven with disappearing door, our N90, N70 and N50 Collections each offer a different design and range of features, so you can create a seamless kitchen best suited to your individual needs.

N 90

Our most premium collection of appliances are designed to enhance the cooking process for any Cookaholic. Offering a choice of 2 display designs with a Full Touch or Shift Control operation, the N90 Collection is equipped with every feature and function that a creative chef desires. To ensure you achieve a seamless kitchen, make sure you mix and match N90 appliances that have the same control display.

N 70

Offering a sleek and stylish design with a range of innovative features and functions, our N70 collection is perfect for those who love to experiment in the kitchen.

N 50

Our newest product collection gives passionate cooks the tools they need to get creative in the kitchen. Designed with a more traditional dial control operation, our N50 Slide&Hide® Oven Collection offers all the features and functions to inspire any budding chef. Head to page 13 to find out more.

*The features included in each collection are an overview only. Please ensure that you check the product detail for exact features of each model.

SLIDE&HIDE®

Get closer to your cooking

We create appliances that are tailored to modern lifestyles and requirements. Our unique Slide&Hide® door fits smoothly under the oven to give plenty of room, as well as better access to the oven's interior – ensuring an easy and flexible approach to cooking.
Recognising our customers' need for maximum cooking space, our unique full-sized single ovens are now even larger with a 71-litre capacity.

B48FT78H0B
Slide&Hide® Single Oven

CIRCO THERM®

SOFT OPEN DOOR FEATURE AVAILABLE WITHIN N90 AND N70 MODELS

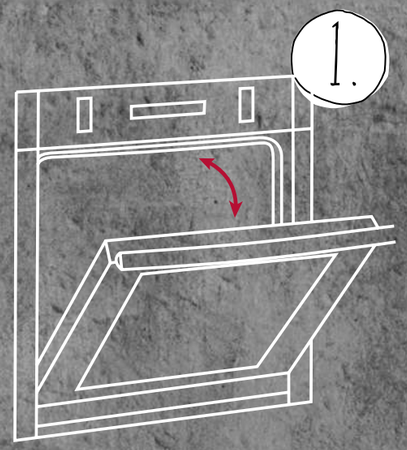

Accessible – Baste, taste and monitor your dishes throughout the cooking process.

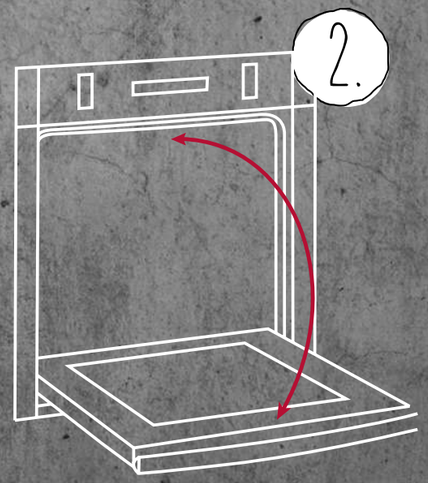

Space saving – Slide the door away to maximise space in small kitchens.

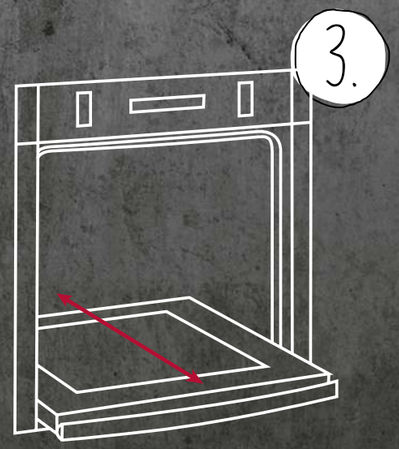

Unique – Be the envy of all your dinner guests with the only oven to feature a disappearing door.

NOTHING GETS IN THE WAY OF COOKING, NOT EVEN THE DOOR.

Selected Slide&Hide® models are now available with a choice of:

FULL STEAM | VARIO STEAM® | PYROLYTIC | ADDED STEAM | WI-FI

Home Connect

CIRCO THERM®

Simultaneous cooking on multiple levels

With CircoTherm® you can cook, roast and bake completely different dishes on all levels and everything will come out tasting like it's supposed to. With no intermingling of flavours, the roast meat will taste like roast meat, and the muffins will taste like muffins. With flat items like cookies you can bake them using all four levels.

COOK A THREE-COURSE MEAL IN-ONE-GO WITHOUT THE INTERMINGLING OF FLAVOURS.

Not in the mood for roast pork raspberry fish muffins? CircoTherm® isn't either.

CircoTherm®

CircoTherm® works by drawing air in from the oven via a powerful stainless steel fan. It then heats up the air and forces it right back into the oven cavity through strategically placed ducts in the rear wall. The desired temperature is achieved quicker and more evenly than in a conventional oven, saving time and energy as little or no preheating is required. There is also a new Power Boost function, available within our 4D CircoTherm® system, to speed things up even more when cooking for short periods of time – just put the food in and start the oven.

The hot air is focused directly onto the food being cooked, wrapping the shelves to ensure the surfaces of baked and roasted items seal quickly. This keeps moisture in and prevents flavour transfer, so you can cook an entire three-course meal using all levels of the oven at the same time.

3D CircoTherm®

Standard on all N50 Single and Double Ovens, our original and renowned 3D CircoTherm® system combines specially designed fan and back panel to deliver even cooking & baking on up to three levels – perfect results every time with no intermingling of flavours.

4D CircoTherm®

Offering all the benefits of our original 3D system, 4D CircoTherm® combines a balanced stainless steel fan with a specially designed back panel and state-of-the-art electronic motor for optimum multi-level results. The electronic motor automatically switches between clockwise and anti-clockwise rotation every few minutes to deliver even better heat distribution throughout the cavity, facilitating cooking & baking on up to 4 levels simultaneously. 4D CircoTherm® is a more efficient and energy saving alternative to our 3D system and is standard on all N70 & N90 Single Ovens.

PYROLYTIC SELF-CLEANING

The oven that almost cleans itself

When you activate the Pyrolytic Self-Cleaning cycle, high temperatures of up to 485°C turn baking, roasting and grilling spatter and residue into dust. Once the oven has cooled you can simply wipe it away with a cloth. That's all there is to it!

MAKE OVEN CLEANING A THING OF THE PAST.

You can choose from three cleaning settings:

- Light residue approx. 1 hour, 15 minutes
- Medium residue approx. 1 hour, 30 minutes
- Intensive cleaning approx. 2 hours

PYROLYTIC

EASY CLEAN®

PYROLYTIC SELF-CLEANING

As a safety measure, the oven door locks automatically until the oven has cooled to an acceptable level. The whole process only takes 1-2 hours depending on the degree of soiling (there are three programme options).

What's more, all of our pyrolytic ovens also come with our efficient EasyClean® cleaning aid. For a lightly soiled oven, when a pyrolytic cycle is not required, place approximately 400ml of water and a drop of washing-up liquid in the base pan and then select the EasyClean® programme. It softens baked-on residue so you can just wipe it down, for fast and uncomplicated oven cleaning.

SLIDE&HIDE® WITH PYROLYTIC SELF-CLEANING

With the stylish and innovative Slide&Hide® Single Oven now available with Pyrolytic Self-Cleaning, cleaning up those little spills won't eat into your dining time. From bubbled-over cheese to sizzling joints of meat, spatter and spillages are simply turned to dust, allowing you to quickly wipe away any residue once the oven has cooled.

ECO CLEAN®

In non-pyrolytic models we have the EcoClean® feature – a microfine ceramic bead coating on the oven's interior back or top, sides and back, depending on the model. It has a very large surface area, making it extremely absorbent. This highly efficient coating lasts for the entire lifetime of the oven and works once the oven reaches 140°C. Depending on how often you use your oven, there is a special EcoClean® cleaning program to get rid of accumulated soiling which may only be necessary 2-3 times a year. This uses a temperature of 275°C to remove burnt-on food without chemical cleaners.

BASE CLEAN

All ovens with the EcoClean® coating also have BaseClean to help clean the base of the oven – it softens burnt-on food with warm water. After the programme has finished you just have to wipe the base with a damp cloth.

A MATCH MADE IN NEFF

NOW ADD STEAM INTO THE MIX

A FULLY FUNCTIONING OVEN, MICROWAVE AND STEAMER IN ONE.

Partner your N50 Slide&Hide® Single Oven with our N50 Compact Microwave Combination Steam Oven to create a seamless design with endless cooking possibilities. Offering just what it says in the name, you can use our N50 Compact Microwave Combination Oven with steam to combine hot air and steam to microwave cooking in one single appliance.

As well as retaining vitamin and mineral content in food, steam cooking preserves flavours, ensuring that less salt additives are needed and a healthier dish is served. Whilst the internal microwave element enables food to be cooked quickly and dishes which benefit from oven baking/roasting are left beautifully fluffy on the inside and crisp on the outside.

WOW WITH SLIDE&HIDE®

Be the envy of all your dinner party guests with the N50 Slide&Hide® Single Pyrolytic Oven.

Our unique Slide&Hide® N50 Single Oven frees up kitchen space without sacrificing premium design. Featuring wider chrome trims with traditional control dials and an electronic display on selected models, our N50 ovens will make a style statement in any kitchen.

Full of innovative features, you can expect 3D CircoTherm® with ClipRail Telescopic Rails as a standard and make oven cleaning a chore of the past with the invaluable Pyrolytic Self-Cleaning function. Furthermore and unique to the N50 Collection only, our built-in Single Point Meat Probe monitors the core temperature of your joint and automatically switches the oven off when it's ready to be served. Ensuring that a succulent roast is always achieved has never been easier.

SINGLE POINT MEAT PROBE

SINGLE POINT MEATPROBE

PYROLYTIC

Featured models:
B5ACM7HH0B N50 Slide&Hide® Single Pyrolytic Oven and C1APG64N0B Compact Microwave Combination Steam Oven

HOME CONNECT

Bake and roast from anywhere

Manage our Wi-Fi connected N 90 and N 50 oven from anywhere you can take your smartphone – start roasting from afar and get a notification when dinner is ready. You can also speak to your oven via voice command and keep your messy hands on the cooking only.

Home Connect

Our innovative Home Connect app also provides you with a wealth of experimental recipes to ensure that you have enough inspiration to get creative in the kitchen and get the best out of your oven.

HOME CONNECT IS COMPATIBLE WITH AMAZON ALEXA AND GOOGLE ASSISTANT

Perfectly concealed: The water container is easy to remove and refill.

VARIO STEAM

Innovative steam assistance

Vario Steam gives dishes just the right amount of moisture by adding steam at three intensity levels, for baking, roasting or just heating up.

Vario Steam works by adding the desired amount of steam, through ducts in the back plate, during the CircoTherm®, top and bottom heat, bread baking and grilling modes. There are three pre set levels to provide a moist cooking environment and help achieve beautiful food that is perfectly succulent and tender.
Dishes retain their colour, flavour and won't dry out during the cooking process.

CRISP ON THE OUTSIDE, SUCCULENT ON THE INSIDE, DELICIOUS ALL ROUND.

FULL STEAM

A fully functioning oven and steamer in one

Our Full Steam ovens combine all the heating modes of a full-featured oven with those of a steam cooker, in one single appliance. Ideal for fish and vegetables, nutrients are retained and food is left beautifully flavoursome. It's easy to operate and also simple to refill the concealed one litre water container – press a button to open the front panel, remove the container, fill it and you're ready to steam ahead.

ADDED STEAM

New for N 50

Added Steam offers two preset levels of steam for combination with traditional cooking methods to achieve dishes with beautiful textures and flavours.

RAIL SYSTEMS

Comfortable and flexible access to your cooking

Lift hot dishes safely and comfortably out of the oven using our ComfortFlex Telescopic Rails, available within the N90 Collection. With the new design the rails don't get in the way – you can grasp the tray or dish from the side for more safety when handling.

Offering a similar benefit of allowing food to be pulled clear of the oven for optimum tasting and basting, our ClipRail Telescopic Rails feature a clip to release functionality and are available within our N50 Collection. You can also position our ClipRail Telescopic Rails on any level in the oven.

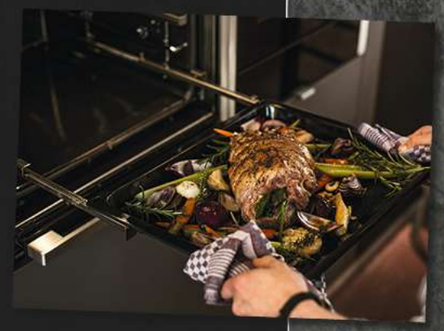

MEAT PROBE

Even the best sometimes need a little help

Take the guesswork out of cooking joints of meat with our clever built-in temperature probe feature. Available within the N90 Collection, the Multi Point Temperature Probe measures the joint's heat at three points to ensure it's perfectly cooked throughout. Offered within the N50 Collection is our Single Point Meat Probe that monitors the core temperature of your joint and automatically switches the oven off when it's ready to be served.

NEFF LIGHT®

Bright and brilliant

A unique feature by NEFF, which allows food to always be visible without opening the oven door. Most ovens have an internal lighting system, but when cooking, shelves and pans can reduce the effectiveness of the light. NEFFLight® brightly illuminates even the farthest corner of the oven using LED bulbs. A special prism in the oven door distributes the light evenly at all levels, for a good view without dazzle.

COMPACT OVENS WITH MICROWAVE & MICROWAVE COMBINATION OVENS

Delicious results in rapid time

Designed to offer the ultimate flexibility, a compact oven with microwave functionality combines the benefits of conventional oven cooking and microwave cooking. Food is cooked quickly and dishes which benefit from oven baking & roasting are left beautifully fluffy on the inside and crisp on the outside.

OVENS WITH INTEGRAL MICROWAVE[1]

Want an oven that offers more versatility for creative cooking? NEFF compact ovens with microwave give you all the benefits of a traditional single oven, but with the added power of a microwave. This combination of traditional oven-led cooking supported by low-medium power microwave (max. 360W) lets you speed up the cooking process while still delivering the flavours and results you'd expect from your NEFF oven.

In addition, you can also team the compact oven with microwave together with a traditional single NEFF oven, creating a highly versatile alternative to a double oven.

MICROWAVE COMBINATION OVENS[1]

Wish your microwave gave crisp and brown results like your oven? That's exactly what you can get with a NEFF microwave combination oven. The combination of microwave (max. 600W) supported by hot air or grill functions enhance your cooking for golden and delicious meals. It's the speed you'd expect from a microwave but with the flavour and appearance you get from an oven or grill.

1 These models are designed to operate best in combination mode, so when heating using microwave only, it may be necessary to adjust cooking times.

FAST FOOD NEVER LOOKED, OR TASTED, SO GOOD

Invaluable in any Cookaholic's kitchen, our N90, N70 and N50 Collection Compact Microwave Ovens feature an integral microwave designed to cook your favourite dishes in a fraction of the time. Combined with the option of conventional oven cooking, our Compact Microwave Ovens offer the ultimate versatility to any meal. Also available within all collections is our range of Compact Full Steam Ovens to offer you a healthier approach to cooking with a more tasty result. All Compact Ovens have been designed to perfectly coordinate with our unique Slide&Hide® Single Ovens.

THE NEFF COFFEE CENTRE

Choose from Ristretto, Espresso, Espresso Macchiato, Coffee, Cappuccino, Latte Macchiato, Caffe Latte, milk froth, warm milk or hot water with the new coffee centre.

SIMPLE, FAST AND IRRESISTIBLE

Impress guests and add a personal touch to your kitchen with the new MyCoffee option. Eight individual beverages can be created, allowing you to select strength, size, temperature and share of milk before saving it under your guest's name. Access to your personal coffee is fast and easy by pressing the

C17KS61N0 Coffee Centre with Home Connect

WARMING DRAWERS

WARMING DRAWERS EXPLAINED...

A warming drawer is a must for the serious cook. They're useful and versatile and help with the preparation and timing of meals. Easily accessible on smooth telescopic runners, they'll not only warm plates before serving up, but keep pre-cooked food warm too. As well as warming, they can be used to defrost delicate foods, melt chocolate, make yoghurt and prove dough.

Designed to coordinate with other NEFF appliances, we offer our Warming Drawers across both the N90 and N50 collection in two sizes – 14cm high, which holds 12 plates, and 29cm high, which can hold 40 plates. Also available within the N90 Collection is our 14cm fully extendable Accessory Drawer, ideal for additional kitchen storage.

N17XH10N0B N90 14cm
High Vacuum Drawer

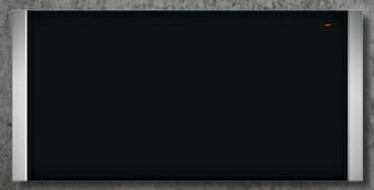

N17XH10N0 N90
29cm High Warming Drawer

N17HH10N0B N90
14cm High Warming Drawer

N17HH11N0B N90
14cm High Warming Drawer with Handle

N17ZH10N0 N90
14cm High Accessory Drawer

VACUUM DRAWER

A must have for any passionate chef, our tailor-made vaccum-seal Sous Vide chamber system can intensify flavours that highlight your finest ingredients. The NEFF Vacuum Drawer turns into your practical helper for vacuum-sealed gravy, sauces, herbs, cut fruit and vegetables in appetizing portions to stock up your fridge and freezer. Further benefits include showcasing your efforts in a jar so basil turns into long-lasting pesto and baby food into handy 'to go' portions, plus, the NEFF Vacuum Drawer becomes your handy extension for flexible sealing of larger jars and plastic containers.

N1AHA02N0B N50
29cm High Warming Drawer

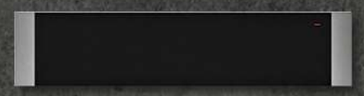

N1AHA01N0B N50
14cm High Warming Drawer

CONTROL DISPLAY

A design for every Cookaholic

Our unique range of Slide&Hide® Ovens are available with 5 different control displays for navigating the cooking features. We offer everything from a large Full Touch TFT control to a traditional dial with electronic display, so you can decide on a design that suits your style of cooking.

N 90: Full Touch Control

Intuitive display with fingertip control

Innovative Full Touch Control operation revolutionises convenience within our premium N90 Collection. The control panel sets new standards with fast navigation and simple, precise operation by touching or swiping the large high-resolution colour TFT display.

Full Touch Control display; 5.7" high resolution TFT colour graphics display

N 90: Medium Shift Control

Offering the best of both

Also available within our N90 Collection is our trusty yet stylish Medium Shift Control that offers both a medium Touch Control display along with a shift panel to aid navigation.

Medium Shift Control; 4.1" high resolution TFT colour graphics display

N70: Small Shift Control

Premium yet practical

Often a popular choice for control display, our Small Shift Control is available within our N70 Collection and offers the best of a high resolution display with a shift panel button for precise and easy navigation.

Small Shift Control; 2.5" high resolution TFT colour graphics display

N 50: Electronic Control with Medium LCD Display

Traditional yet precise navigation

Our N50 Collection offers the convenience and precision of a traditional control dial alongside a stylish large LCD Display. The oven proposes a suitable temperature when a particular function is selected and displays the temperature digitally. Other display features include a control panel lock and, if left unadjusted for a period of time, the oven will switch itself off as a safety measure.

Medium LCD White electronic display

Small LCD White display

N 50: Small LCD Display

Simplicity at its best

An alternative control display offered within our N50 Collection. Featuring traditional controls dials alongside a small LCD display, navigating your oven can be as simple as you like.

THE PERFECT COMBINATION

Mix and match your appliances

Create your perfect kitchen by choosing your very own appliance combination and cooking features to suit your lifestyle. With our SeamlessCombination® strips you can seamlessly combine our N 90 and N 70 Collection of single ovens and compact appliances to create a sleek and stylish finish.

N 90

C27CSS22H0B
CircoTherm® Compact Oven with Full Touch Control N 90

Z11SZ60X0
Seamless Combination® strips
For 45cm Compact Oven with 14cm Warming Drawer

N17HH10N0B
Warming Drawer N 70 and N 90

B58VT68H0B
Slide&Hide® Single Oven with Pyrolytic Self-Cleaning, Vario Steam and Full Touch Control N 90

Z11SZ80X0
Seamless Combination® strips
For 60cm Single Slide&Hide® Oven with 29cm Warming Drawer

N17HH20N0B
Warming Drawer N 90/N 70

Seamless Combination® strips are ONLY compatible with N 90 and N 70 single/ compact ovens and warming drawers.

C27CS22H0B
Compact Oven with Shift Control Fascia 4.1" N 90

Z11SZ90X0
Seamless Combination® strips
For 60cm Single Slide&Hide® Oven with 45cm Compact Oven (special aperture applies)

B57CS24H0B
Slide&Hide® with Single Pyrolytic Oven and with Shift Control Fascia 4.1" N 90

N 70

C17MR02N0B
Compact Combination Oven with Microwave with Shift Control Fascia 2.5" N 70

Z11SZ60X0
Seamless Combination® strips
For 45cm Compact Oven with 14cm Warming Drawer

N17HH10N0B
Warming Drawer N 70 and N 90

B57CR22N0B
Slide&Hide® Single Oven with Pyrolytic Self-Cleaning with Shift Control Fascia 2.5" N 70

Z11SZ80X0
Seamless Combination® strips
For 60cm Single Slide&Hide® Oven with 29cm Warming Drawer

N17HH20N0B
Warming Drawer N 90/N 70

C17MR02N0B
Compact Combination Oven with Microwave with Shift Control Fascia 2.5" N 70

Z11SZ90X0
Seamless Combination® strips
For 60cm Single Slide&Hide® Oven with 45cm Compact Oven (special aperture applies)

B57CR22N0B
Slide&Hide® Single Pyrolytic Oven with Shift Control Fascia 2.5" N 70

N 50

C1APG64N0B
Compact Microwave Combination Steam Oven with White LCD Display N 50

N1AHA01N0B
Warming Drawer N 50

B5ACM7HH0B
Slide&Hide® Single Pyrolytic Oven with White LCD Display N 50

N1AHA02N0B
Warming Drawer 29cm N 50

C1APG64N0B
Compact Microwave Combination Steam Oven with White LCD Display N 50

B5ACM7HH0B
Slide&Hide® Single Pyrolytic Oven with White LCD Display N 50

*The features included in each collection are an overview only. Please ensure that you check the product detail for exact features of each model.

COOKING WITH A NEFF OVEN

KEY FEATURES

CIRCO THERM®
The CircoTherm® Power Boost function speeds things up even more when cooking for short periods of time – just put the food in and start the oven.

CIRCO THERM® GENTLE
Optimised for gentler cooking and baking on one level. It's perfect for frozen or convenience foods, bread, cakes and meats. Available on all electronically controlled ovens.

VARIO STEAM
Vario Steam gives dishes just the right amount of moisture by adding steam at three intensity levels, for baking, roasting or just heating up. Foods come out with more intense flavour and an appetising appearance.

FULL STEAM
Make your favourite dishes healthier by locking in food's nutrients and flavour with our Full Steam function. It's easy to operate and also simple to refill the one litre water container – press a button to open the front panel, remove the container, fill it and you're ready to steam ahead.

SOUS VIDE
By cooking at very low temperatures (55°C – 60°C) Sous Vide seals in flavour and achieves beautiful uniform results. With the option to cook in selected single or compact steam ovens.

BAKING AND ROASTING ASSISTANT
This innovative assistant makes food preparation even easier and more convenient. The Baking and Roasting Assistant serves up a cooking suggestion at the press of a button. It also recommends the ideal heating mode, temperature and time, to ensure perfect results.

MEAT PROBE
The Multi Point Meat Probe measures the joint's heat at three points and the Single Point Meat Probe measures in one point, ensuring the right core temperature is reached, so you can take the roast out when it's ready.

SABBATH
This setting engages the top and bottom heating elements to reach a temperature of between 85°C and 140°C. The oven can be set to run for up to 74 hours to keep food warm, without changing the status of the fan, lights and controls.

Wi-Fi *Control your oven directly from a Smart Device App or Voice Command*

OVEN CLEANING FUNCTIONS

PYROLYTIC SELF-CLEANING
Pyrolytic cleaning is a self-cleaning system for ovens. The process superheats the oven to approximately 485°C, which burns off any deposits from baking, roasting and grilling. This creates a perfectly clean oven and a residue of fine dust that's easily removed with a damp cloth.

OVEN CLEANING
A special electronic setting designed to keep EcoClean® surfaces inside the oven as clean as possible. Used on a regular basis, it can keep the oven's interior lining remarkably clean with minimal maintenance required.

BASE CLEAN
Base Clean helps clean the bottom of the oven by softening dirt with warm water. After the programme has finished you just have to wipe the base with a damp cloth.

EASYCLEAN®
For a lightly soiled oven, put approximately 400ml of water and a drop of washing-up liquid in the base pan and then select the EasyClean® programme. It softens baked-on residue so you can just wipe it down, for fast and uncomplicated oven cleaning.

DESCALING
All NEFF steam appliances contain a descaling programme which can be set according to the hardness of the water.

ECOCLEAN®
EcoClean® is a microfine ceramic bead coating on the oven's interior back or top,sides & back, depending on the model. It has a very large surface area, making it extremely absorbent. It absorbs fat droplets and keeps the inside of the oven clean.

COOKING FUNCTIONS

CIRCO THERM®
The fan draws air from the interior of the oven, then heats it up and forces it back into the cavity to ensure even heat distribution. Cook on four levels within the N 90 and N 70 Collection and 3 levels within the N 50 Collection.

CIRCO THERM® INTENSIVE
Uses a combination of CircoTherm® and bottom heat, ideal for foods that need a crispy underside like pizzas or speciality breads. It can also be used for one stage pastry such as lemon meringue pie, eliminating the need for blind baking.

TOP/BOTTOM HEAT
Providing conventional cooking heat sources at the top and bottom of the oven. Heat travels to the centre of the oven by natural conduction. Ideal for baking pastries and scones.

CIRCO ROASTING
An ideal function for cooking meat and poultry for a rotisserie result where the fan and top element alternatively come on.

CENTRE SURFACE GRILL
You can use just the centre section of the grill for smaller quantities.

BREAD BAKING
Bread baking temperature varies between 180°C and 220°C. Ideally suited to baking crusty bread with an open texture. Up to three levels of bread can be baked at the same time.

LOW TEMPERATURE COOKING
A special setting for hob-sealed prime cuts of meat and poultry. Meat/poultry is placed in a pre-heated dish and transferred into the oven. The low temperature setting uses a fixed temperature to gently tenderise without overcooking, resulting in meat/poultry that is juicy and melts in the mouth.

REHEAT
Reheat allows you to gently warm dishes again – and thanks to the moisture in the oven, they will look and taste freshly prepared.

CONVENTIONAL HEAT GENTLE
This setting heats up the centre of the oven for single shelf cooking. The oven maintains its average temperature for gentler cooking by reducing the thermostat cycles and using residual heat as part of the process.

FULL SURFACE GRILL
The grill element is situated in the oven roof. It is thermostatically controlled and will cycle on and off to maintain the required temperature.

DEFROST
The CircoTherm® fan circulates air through the oven to speed up defrosting times while retaining food colour and moisture. Ideal for delicate foods as well as fish and poultry.

BOTTOM HEAT
Providing heat from the bottom of the oven, this method is ideal for pizza bases and pastry cases to create a crispy underside or for bain marie and casseroles.

KEEP WARM
An ideal setting for keeping food warm without drying it out before serving. Typically set between 66°C to 100°C.

PLATE WARMING
Hot air is circulated at up to 65°C to safely warm plates and service dishes in preparation for dinner.

DOUGH PROVING
This function provides a warm, moist environment which gives perfect conditions for proving any yeasted dough.

AUTOMATIC SAFETY SWITCH OFF
For electronic ovens only, this feature will automatically cut in if no changes to the settings on the appliance have been made in a long time, giving you complete peace of mind.

Temperature range	Automatic switch off after
Under 140°C	73 hours
141 – 200°C	6 hours
201 – 250°C	3 hours
251°C	2 hours

SLIDE&HIDE® PYROLYTIC OVENS WITH VARIOSTEAM®

The ultimate choice for creative Cookaholics

Whatever your specialities, we've designed an oven to inspire even the most experimental cooks. Combining our unique Slide&Hide® disappearing door design with VarioSteam® and Pyrolytic SelfCleaning, creative cooks can achieve succulent meat, beautifully crusty bread and flavoursome bakes without worrying about roasting spatter and spillages.

SLIDE&HIDE® OVENS WITH PYROLYTIC CLEANING

The only oven with a disappearing door is cleaner than ever

Our unique Slide&Hide® ovens now come with Pyrolytic SelfCleaning function. Using a high temperature programme to burn food residue to dust, which can be quickly wiped away once the oven has cooled, oven cleaning has now become a thing of the past. From bubbled over cheese or sizzling joints of meat, our Pyrolytic ovens give you more time to concentrate on your next creation.

B58VT68H0B
Slide&Hide® Pyrolytic Oven with VarioSteam®
N 90

B58CT68H0B
Slide&Hide® Pyrolytic Oven
N 90

KEY FEATURES

KEY FEATURES

COLLECTION		N 90t	N 90t	N 90s	N 90s	N 70	N 70	N 50	N 50	N 50	N 50	N 50
BLACK GLASS WITH STEEL TRIM		B58VT68H0B	B58CT68H0B	B57VS24H0B	B57CS24H0B	B57VR22N0B	B57CR22N0B	B5AVM7HH0B	B5AVH6AH0B	B5ACM7HH0B	B5ACH7AH0B	B6ACH7HH0B
OPERATION												
Full Touch with Large colour TFT Clear Text display		●	●									
Shift Control, Medium colour TFT Clear Text display				●	●							
Shift Control, Small TFT Clear Text display						●	●					
NEFF Design Rectractable controls, LCD display								●	●	●	●	●
Door type		Slide&Hide® with Rotating Handle	Slide&Hide® with Rotating Handle	Slide&Hide® with Rotating Handle	Slide&Hide® with Rotating Handle	Slide&Hide® with Rotating Handle	Slide&Hide® with Rotating Handle	Slide&Hide® with Rotating Handle	Slide&Hide® with Rotating Handle	Slide&Hide® with Rotating Handle	Slide&Hide® with Rotating Handle	Slide&Hide® with Fixed Handle
Soft Open door		●	●	●	●	●	●					
Suitable for Seamless Combination® Accessories		●	●	●	●	●	●					
Electronic control		●	●	●	●	●	●	●	●	●	●	●
KEY FEATURES												
Home Connect		●	●	●	●			●	●	●	●	●
100% steam / Sous Vide Function												
VarioSteam® / added steam		●		●		●		/ ●	/ ●			
NEFFLight®		●	●									
Multi Point Temperature Probe / Meat Probe		● /	● /					/ ●		/ ●		
Baking and roasting assistant		●	●	●	●							
Telescopic Rail		1 x ComfortFlex	1 x ComfortFlex	1 x ComfortFlex	1 x ComfortFlex			1 x Clip rail		1 x Clip rail		1 x Clip rail
CLEANING FUNCTION												
Pyrolytic cleaning		●	●	●	●	●	●	●	●	●	●	●
EcoClean® liners (Roof / Back / Sides)												
EasyClean® / Base Clean		● /	● /	● /	● /	● /	● /	● /	● /	● /	● /	● /
COOKING FUNCTIONS												
CircoTherm®		4D with Power Boost	4D with Power Boost	4D with Power Boost	4D with Power Boost	4D with Power Boost	4D with Power Boost	3D	3D	3D	3D	3D
CircoTherm® Gentle / Top & Bottom Heat gentle		● / ●	● / ●	● / ●	● / ●	● / ●	● / ●	● /	● /	● /	● /	● /
Top&Bottom heat / Bottom heat only		● / ●	● / ●	● / ●	● / ●	● / ●	● / ●	● / ●	● / ●	● / ●	● / ●	● / ●
Circo Roasting		●	●	●	●	●	●	●	●	●	●	●
Full surface grill / Centre Surface Grill		● / ●	● / ●	● / ●	● / ●	● / ●	● / ●	● /	● /	● /	● /	● /
Bread baking		●	●	●	●	●	●	●	●	●	●	●
Low temperature cooking		●	●	●	●	●	●					
CircoTherm® Intensive (Pizza Setting)		●	●	●	●	●	●	●	●	●	●	●
Defrost		●	●	●	●							
Plate warming / Keep Warm		● / ●	● / ●	/ ●		/ ●						
Fast preheating		●	●	●	●	●	●	●	●	●	●	●
PERFORMANCE & TECHNICAL INFORMATION												
Energy efficiency index[1]		87.1	87.1	87.1	87.1	81.2	81.2	95.3	95.3	95.3	95.3	95.3
Energy efficiency rating[1]		A	A	A	A	A+	A+	A	A	A	A	A
Energy consumption CircoTherm®[1]	kWh	0.74	0.74	0.74	0.74	0.69	0.69	0.81	0.81	0.81	0.81	0.81
Energy consumption conventional[1]	kWh	0.9	0.9	0.9	0.9	0.87	0.87	1.04	1.04	1.04	1.04	1.04
Oven capacity[1]	L	71	71	71	71	71	71	71	71	71	71	71
Time to cook standard load[1]	mins	45	45	44	44	44	44	58	58	58	58	58
Largest baking sheet area[1]	sq cm	1290	1290	1290	1290	1290	1290	1290	1290	1290	1290	1290
Total connected load W / Fuse Rating		3450 / 16	3450 / 16	3450 / 16	3450 / 16	3450 / 16	3450 / 16	3600 / 16	3600 / 16	2990 / 13	2990 / 13	2990 / 13
Cable length	cm	120	120	120	120	120	120	120	120	120	120	120
Water tank capacity	L	1.0		1.0		1.0		0.2	0.2			
STANDARD ACCESSORIES												
Wire shelves / Universal full width pan		2 / 1	2 / 1	2 / 1	2 / 1	2 / 1	2 / 1	2 / 1	2 / 1	2 / 1	2 / 1	2 / 1

[1] Measured according the EN50304, 65/2014

SLIDE&HIDE® SINGLE OVENS WITH FULL STEAM

All the benefits of a steamer and a conventional oven

Our Full Steam ovens, within the N 90 collection, allow you to cook with steam as a standalone function. Easy to operate and simple to fill via a concealed one litre container, our Full Steam ovens allow you to cook moist, flavoursome and healthier meals. For added benefit, our VarioSteam® function also comes as standard with the N90 Full Steam Oven.

SLIDE&HIDE® SINGLE OVENS WITH VARIOSTEAM®

Everything you need to cook up a feast

Our Slide&Hide® with VarioSteam® ovens enhance your cooking by injecting steam whilst using traditional cooking functions to intensify your dish. Ideal for achieving succulent joints of meat, perfecting crusty bread and reheating previously cooked meals.

SLIDE&HIDE® SINGLE OVENS

The only oven with the disappearing door

Inspired by the most demanding Cookaholics, our unique Slide&Hide® disappearing oven door is designed to get passionate cooks closer to their cooking. With the Slide&Hide® door retracting smoothly under the oven cavity, this oven is ideal for small kitchens with big flavours – perfect for tasting, basting and sampling.

B48FT78H0B
Slide&Hide® Oven with Full Steam — N 90

B47VS34H0B
Slide&Hide® Oven with VarioSteam® — N 90

B47CS34H0B
Slide&Hide® Oven — N 90

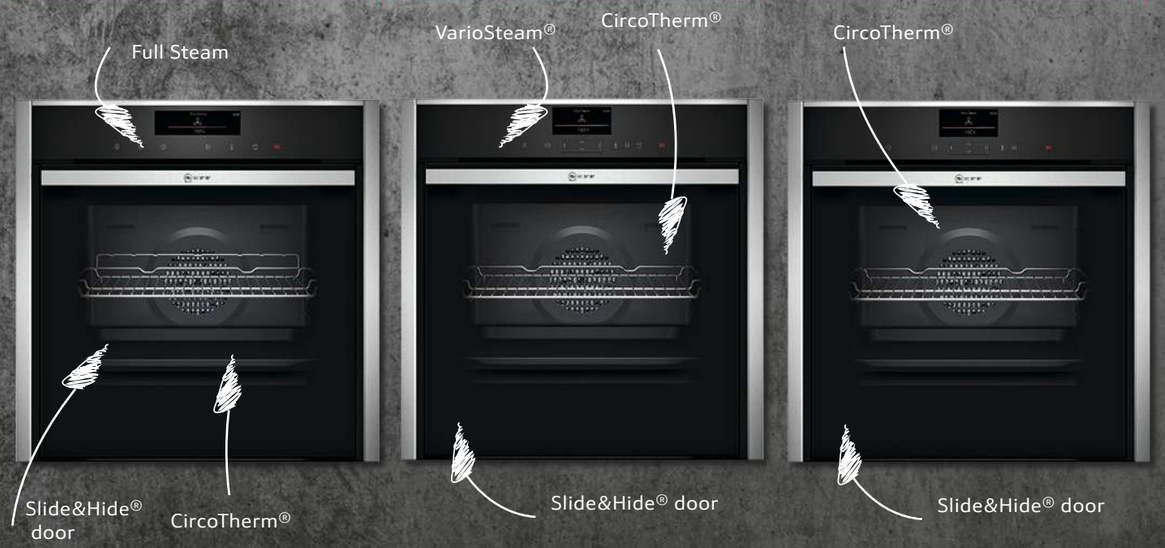

KEY FEATURES

KEY FEATURES

KEY FEATURES

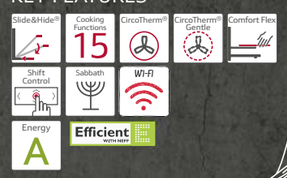

CRISP ON THE OUTSIDE, SUCCULENT ON THE INSIDE, DELICIOUS ALL ROUND

COLLECTION	N 90t	N 90s	N 90s	N 90s	N 70	N 70	N 50	N 50	N 50	N 50
BLACK GLASS WITH STEEL TRIM	B48FT78H0B	B47FS34H0B	B47VS34H0B	B47CS34H0B	B47VR32N0B	B47CR32N0B	B4AVH1AH0B	B4ACM5HH0B	B4ACF1AN0B	B3ACE4HN0B
OPERATION										
Full Touch with Large colour TFT Clear Text display	●									
Shift Control, Medium colour TFT Clear Text display		●	●	●						
Shift Control, Small TFT Clear Text display					●	●				
NEFF Design Rectractable controls, LCD display							●	●	●	●
Door type	Slide&Hide® with Rotating Handle	Slide&Hide® with Rotating Handle	Slide&Hide® with Rotating Handle	Slide&Hide® with Rotating Handle	Slide&Hide® with Rotating Handle	Slide&Hide® with Rotating Handle	Slide&Hide® with Rotating Handle	Slide&Hide® with Rotating Handle	Slide&Hide® with Rotating Handle	Slide&Hide® with Fixed Handle
Soft Open door	●	●	●	●	●	●				
Suitable for Seamless Combination® Accessories	●	●	●	●	●	●				
Electronic control	●	●	●	●	●	●	●	●		
KEY FEATURES										
Home Connect	●	●	●	●			●	●		
100% steam / Sous Vide Function	● / ●	● /								
VarioSteam®/ added steam	●	●	●		●		/ ●			
NEFFLight®	●									
Multi Point Temperature Probe / Meat Probe	● /							/ ●		
Baking and roasting assistant	●	●	●	●						
Telescopic Rail	1 x ComfortFlex	1 x ComfortFlex	1 x ComfortFlex	1 x ComfortFlex				1 x Clip rail		1 x Clip rail
CLEANING FUNCTION										
Pyrolytic cleaning										
EcoClean® liners (Roof / Back / Sides)	roof / back / sides	roof / back / sides	roof / back / sides	roof / back / sides	roof / back / sides	roof / back / sides	back	roof / back / sides	back	back
EasyClean® / Base Clean	● / ●	● / ●	● / ●	● / ●	● / ●	● / ●	● / ●	● / ●		
COOKING FUNCTIONS										
CircoTherm®	4D with Power Boost	4D with Power Boost	4D with Power Boost	4D with Power Boost	4D with Power Boost	4D with Power Boost	3D	3D	3D	3D
CircoTherm® Gentle / Top & Bottom Heat gentle	● / ●	● / ●	● / ●	● / ●	● / ●	● / ●	● /	● /	● /	● /
Top/bottom heat / Bottom heat only	● / ●	● / ●	● / ●	● / ●	● / ●	● / ●	● / ●	● / ●	● /	● /
Circo Roasting	●	●	●	●	●	●	●	●	●	●
Full surface grill / Centre Surface Grill	● / ●	● / ●	● / ●	● / ●	● / ●	● / ●	● /	● /	● /	● /
Bread baking	●	●	●	●	●	●	●	●		
Low temperature cooking	●	●	●	●	●	●				
CircoTherm® Intensive (Pizza Setting)	●	●	●	●	●	●	●	●	●	●
Defrost	With Steam	With Steam	●	●						
Plate warming / Keep Warm	● / ●	/ ●	/ ●		/ ●					
Fast preheating	●	●	●	●	●	●	●	●	●	●
PERFORMANCE & TECHNICAL INFORMATION										
Energy efficiency index[1]	81.2	81.2	87.1	87.1	81.2	81.2	95.3	95.3	95.3	95.3
Energy efficiency rating[1]	A+	A+	A	A	A+	A+	A	A	A	A
Energy consumption CircoTherm®[1] kWh	0.69	0.69	0.74	0.74	0.69	0.69	0.81	0.81	0.81	0.81
Energy consumption conventional[1] kWh	0.9	0.9	0.9	0.9	0.9	0.9	1.04	1.04	1.04	1.04
Oven capacity[1] L	71	71	71	71	71	71	71	71	71	71
Time to cook standard load[1] mins	44	44	44	44	44	44	58	58	58	58
Largest baking sheet area[1] sq cm	1290	1290	1290	1290	1290	1290	1290	1290	1290	1290
Total connected load Fuse Rating W	3450 / 16	3450 / 16	3450 / 16	3450 / 16	3450 / 16	3450 / 16	3450 / 16	2990 / 13	2990 / 13	2990 / 13
Cable length cm	120	120	120	120	120	120	120	120	120	120
Water tank capacity L	1.0	1.0	1.0		1.0		0.2			
STANDARD ACCESSORIES										
Wire shelves / Universal full width pan	2 / 1	2 / 1	2 / 1	2 / 1	2 / 1	2 / 1	2 / 1	2 / 1	2 / 1	2 / 1
Steam trays	3	3								

[1] Measured according the EN50304, 65/2014

SINGLE PYROLYTIC OVENS

The oven that almost cleans itself

When oven scrubbing simply isn't an option, our single pyrolytic ovens are the only choice for foodies who love to get creative in their kitchen. Simply activate the Pyrolytic SelfCleaning function to tackle tough splatter and spillages. Featuring a standard dropdown door, our single Pyrolytic ovens also feature the same fascia design as our Slide&Hide® range.

SINGLE OVENS

Cook a threecourse meal in one go with CircoTherm®

Featuring our unique CircoTherm® technology, a NEFF oven is designed with social dining in mind. With hot air drawn in from the oven via a stainless steel fan, each shelf is effectively wrapped to ensure that there's no intermingling of flavours across individual dishes. Our single ovens feature a standard drop down door and the same contemporary fascia design as our Slide&Hide® range.

DESIGNED WITH SOCIAL DINING IN MIND

Featuring our unique CircoTherm® technology, NEFF ovens are perfectly designed for busy family life and sociable dining. With the option to cook different dishes across all four levels without any intermingling of flavours, each course can be cooked at the same time.

B27CR22N1B
Single Pyrolytic Oven — **N 70**

B17CR32N1B
Single Oven — **N 70**

KEY FEATURES

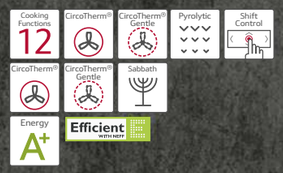

KEY FEATURES

COLLECTION	N 70	N 50	N 70	N 50	N 70
BLACK GLASS WITH STEEL TRIM	B27CR22N1B	B2ACH7HH0B	B17CR32N1B	B1ACE4HN0B	
WHITE GLASS WITH STEEL TRIM					B1ACE4HW0B
OPERATION					
Full Touch with Large colour TFT Clear Text display					
Shift Control, Medium colour TFT Clear Text display					
Shift Control, Small TFT Clear Text display	●		●		
NEFF Design Rectractable controls, LCD display		●		●	●
Door type	Drop Down Door	Drop Down Door	Drop Down Door	Drop Down Door	Drop Down Door
Soft Open door					
Suitable for Seamless Combination® Accessories					
Electronic control	●	●	●		
KEY FEATURES					
Home Connect		●			
100% steam / Sous Vide Function					
VarioSteam®/ added steam					
NEFFLight®					
Multi Point Temperature Probe / Meat Probe					
Baking and roasting assistant					
Telescopic Rail		1 x Clip rail		1 x Clip rail	1 x Clip rail
CLEANING FUNCTION					
Pyrolytic cleaning	●	●			
EcoClean® liners (Roof / Back / Sides)			roof / back / sides	back	back
EasyClean® / Base Clean	● /	● / ●	● / ●		
COOKING FUNCTIONS					
CircoTherm®	4D with Power Boost	3D	4D with Power Boost	3D	3D
CircoTherm® Gentle / Top & Bottom Heat gentle	● / ●	● /	● / ●	● /	● /
Top/bottom heat / Bottom heat only	● / ●	● / ●	● / ●	● /	● /
Circo Roasting	●	●	●	●	●
Full surface grill / Centre Surface Grill	● / ●	● /	● / ●	● /	● /
Bread baking	●	●	●		
Low temperature cooking	●		●		
CircoTherm® Intensive (Pizza Setting)	●	●	●	●	●
Defrost					
Plate warming / Keep Warm					
Fast preheating	●	●	●	●	●
PERFORMANCE & TECHNICAL INFORMATION					
Energy efficiency index[1]	81.2	95.3	81.2	95.3	95.3
Energy efficiency rating[1]	A+	A	A+	A	A
Energy consumption CircoTherm®[1] kWh	0.69	0.81	0.69	0.81	0.81
Energy consumption conventional[1] kWh	0.87	0.99	0.87	0.97	0.97
Oven capacity[1] L	71	71	71	71	71
Time to cook standard load[1] mins	44	58	44	58	58
Largest baking sheet area[1] sq cm	1290	1290	1290	1290	1290
Total connected load / Fuse Rating W	2990 / 13	2990 / 13	2990 / 13	2990 / 13	2990 / 13
Cable length cm	120	120	120	120	120
Water tank capacity L					
STANDARD ACCESSORIES					
Wire shelves / Universal full width pan	2 / 1	2 / 1	2 / 1	2 / 1	2 / 1

[1] Measured according the EN50304, 65/2014

COMPACT COMBINATION OVEN WITH FULL STEAM

Perfect for health conscious Cookaholics

Our compact Full Steam ovens are the ideal choice for cooks who love to prepare fresh, seasonal produce. As well as retaining vitamin and mineral content in food, steam cooking preserves flavours, ensuring that less salt and oil additives are needed. Designed to complement our selected Slide&Hide® ovens range, SeamlessCombination® mounting kits allow you to 'mix and match' your own sleek and stylish appliance wall.

Find out more at **neff-home com/uk/**

C18FT56H0B
Compact Oven with Full Steam — **N 90**

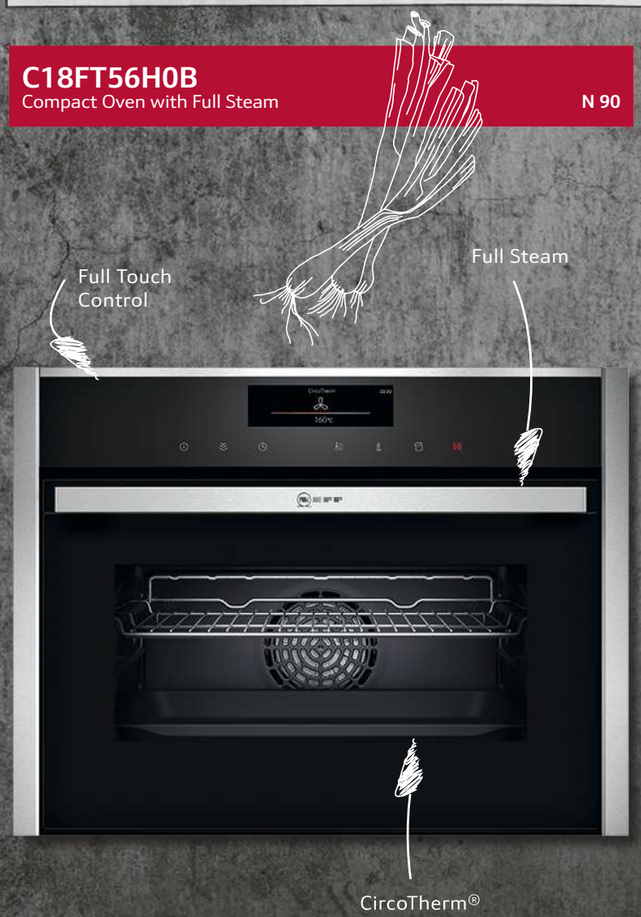

KEY FEATURES

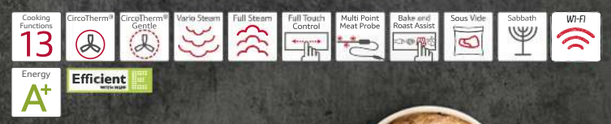

COLLECTION		N 90t		N 90	N 50
TYPE		COMPACT STEAM OVEN		COMPACT STEAM OVEN	COMPACT MICROWAVE & STEAM COMBINATION OVEN
BLACK GLASS WITH STEEL TRIM		C18FT56H0B		C17FS32H0B	C1APG64N0B
OPERATION					
Full Touch with Large colour TFT Clear Text display		●			
Shift Control, Medium colour TFT Clear Text display				●	
Shift Control, Small TFT Clear Text display					
NEFF Design Rectractable controls, LCD display					●
KEY FEATURES					
Soft close / open door		● / ●		● / ●	
Hot Air cooking		●		●	●
Home Connect		●		●	
Microwave / Microwave Combination Cooking					● / ●
100% steam / Sous Vide Function		● / ●		● /	● /
VarioSteam®		●		●	Added steam
Pyrolytic cleaning					
EasyClean® / Base Clean		● / ●		● / ●	
EcoClean® liners		roof, back, sides		roof, back, sides	back
Electronic control		●		●	●
Multi Point Temperature Probe		●			
Baking and roasting assistant		●		●	
Suitable for Seamless Combination® Accessories		●		●	
Telescopic Rail					
ADDITIONAL FUNCTIONS					
Hot Air Gentle / Top & Bottom Heat gentle		● / ●		● / ●	
Top/bottom heat / Bottom heat only		● / ●		● / ●	
Fan & Grill		●		●	●
Full surface grill / Centre surface grill		● / ●		● / ●	
Bread baking		●		●	
Low temperature cooking		●		●	
Pizza setting		●		●	
Defrost		Using steam		Using steam	
Plate warming / Keep warm		● / ●		/ ●	
Fast Preheating		●		●	●
PERFORMANCE & TECHNICAL INFORMATION					
Oven capacity[1]	L	47		47	36
Energy efficiency rating[1]		A+		A+	
Energy consumption CircoTherm®[1]		0.61		0.61	
Energy consumption conventional[1]		0.73		0.73	
Time to cook standard load[1]	mins	41		41	
Largest baking sheet area[1]	sq cm	1290		1290	
Inverter technology[2]					●
Maximum power Microwave (W)[3] / No. of power levels					1000 / 5
Total connected load / Fuse Rating	W	3300 / 16		3300 / 16	3100 / 16
Cable length	cm	150		150	150
Turntable diameter	mm				
Water tank capacity	L	1.0		1.0	0.80
STANDARD ACCESSORIES					
Wire shelves / Universal Pan		1 / 1		1 / 1	1 / Glass tray & insert grid
Steam Trays		3		3	1

COLLECTION		N 90s
BLACK GLASS WITH STEEL TRIM		C17KS61H0
Design compatible with		N 70 / N 90 models
CONTROLS		
Shift Control, Medium colour TFT display		●
KEY FEATURES		
Home Connect		●
Electronic control		●
SensoFlow System		●
Aroma pressure system		●
Auto Valve System		●
AromaDoubleShot		●
Automatic steam blast milk cleaning function		●
Ceramic coffee grinders		●
Multilevel grinding setting		●
Cup illumination		●
Height adjustable milk & coffee outlets	mm	7-15
Adjustable automatic switch off setting		●
Integrated water filter		●
PROGRAMMES / FUNCTIONS		
Personalised beverage settings		1 or 2 cup
Milk foam		1 or 2 cup
Hot water		1 or 2 cup
Warm milk		1 or 2 cup
Ristretto		1 or 2 cup
Coffee		1 or 2 cup
Espresso		1 or 2 cup
Cappuccino		1 or 2 cup
Latte Macchiato		1 or 2 cup
Caffe latte		1 or 2 cup
Espresso Macchiato		1 or 2 cup
One touch function for milk drinks		●
Coffee / Hot Water temperature options		3 / 4
Milk foam/frothing function		● / ●
Warm Milk function		●
Cleaning / descaling / programmes		● / ●
Automatic rinse when switched on/off		● / ●
PERFORMANCE & TECHNICAL INFORMATION		
Installation in a tall housing		950-1450mm high
Left hinged door to access interior		●
Brewing chamber volume	g	8-12
Bean container capacity	g	500
Ground coffee container		●
Water tank capacity	L	2.4
Total connected laoding	W	1600
Cable length	cm	170
ACCESSORIES		
Insulated Milk container capacity	L	0.5
Milk pipe		●
Coffee scoop		●

[1] Measured according the EN50304, 65/2014. [2] For further information on inverter technology, please go to www.neffhome.com/uk. [3] For Inverter models, the maximum setting offers a time limited boost option for heating liquids. To ensure optimal results and to protect the appliance, the microwave power output is reduced in stages over the first few minutes down to the next power level (600W). After a cooling period, the microwave boost option will be available once more.

BARISTA INSPIRED COFFEE IN YOUR OWN HOME

Designed with true coffee connoisseurs in mind, our compact coffee centres are the ultimate addition to any sociable kitchen.
From Cappuccinos with friends to that essential morning Espresso, use the MyCoffee option to select up to 8 firm favourites.

COMPACT OVENS WITH MICROWAVE & MICROWAVE COMBINATION OVENS

Delicious results in rapid time

Designed to offer the ultimate flexibility, a compact oven with microwave functionality combines the benefits of conventional oven cooking and microwave cooking. Food is cooked quickly and dishes which benefit from oven baking & roasting are left beautifully fluffy on the inside and crisp on the outside.

C28MT27H0B
Compact Oven with Microwave **N 90**

FUNCTION AND SPEED COMBINED

Pyrolytic SelfCleaning

Full Touch Control

CircoTherm®

KEY FEATURES

Efficient

Ovens with integral Microwave[1]
Want an oven that offers more versatility for creative cooking? NEFF compact ovens with microwave give you all the benefits of a traditional single oven, but with the added power of a microwave. This combination of traditional oven led cooking supported by low medium power microwave (max. 360W) lets you speed up the cooking process while still delivering the flavours and results you'd expect from your NEFF oven.

In addition, you can also team the compact oven with microwave together with a traditional single NEFF oven, creating a highly versatile alternative to a double oven.

Microwave Combination Ovens[1]
Wish your microwave gave crisp and brown results like your oven? That's exactly what you can get with a NEFF microwave combination oven. The combination of microwave (max. 600W) supported by hot air or grill functions enhance your cooking for golden and delicious meals. It's the speed you'd expect from a microwave but with the flavour and appearance you get from an oven or grill.

1 These models are designed to operate best in combination mode, so when heating using microwave only, it may be necessary to adjust cooking times.

COLLECTION	N 90s	N 90t	N 90s	N 90s	N 70	N70 touch	N 50
TYPE	COMPACT OVEN	COMPACT OVEN WITH MICROWAVE	COMPACT OVEN WITH MICROWAVE	COMPACT OVEN WITH MICROWAVE	COMPACT OVEN WITH MICROWAVE	COMPACT MICROWAVE	COMPACT MICROWAVE COMBINATION OVEN
COLOUR							
Model number Black glass with steel trim	C27CS22H0B	C28MT27H0B	C27MS22H0B	C17MS32H0B	C17MR02N0B	C17UR02N0B	C1AMG84N0B
OPERATION							
Full Touch with Large colour TFT Clear Text display		●					
Shift Control, Medium colour TFT Clear Text display	●		●	●			
Shift Control, Small TFT Clear Text display					●	Touch control	
NEFF Design Rectractable controls, LCD display							●
KEY FEATURES							
Soft close / open door	● / ●	● / ●	● / ●	● / ●	● / ●		
Hot Air cooking	●	●	●	●	●		●
Home Connect	●	●	●	●			
Microwave / Microwave Combination Cooking		● / ●	● / ●	● / ●	● / ●	● /	● / ●
100% steam / Sous Vide Function							
VarioSteam®							
Pyrolytic cleaning®	●	●	●				
EasyClean® / Base Clean	● /	● /	● /	● / ●			
EcoClean® liners				roof, back, sides			
Electronic control	●	●	●	●	●	●	●
Multi Point Temperature Probe		●					
Baking and roasting assistant	●						
Suitable for Seamless Combination® Accessories	●	●	●	●	●		
Telescopic Rail		ComfortFlex					
ADDITIONAL FUNCTIONS							
Hot Air Gentle / Top & Bottom Heat gentle	● / ●	● / ●	● / ●	● / ●	● /		
Top/bottom heat / Bottom heat only	● / ●	● / ●	● / ●	● / ●			
Fan & Grill	●	●	●	●	●		●
Full surface grill / Centre surface grill	● / ●	● / ●	● / ●	● / ●	● / ●		● /
Bread baking	●						
Low temperature cooking	●	●	●	●			
Pizza setting	●	●	●	●			●
Defrost	●						
Plate warming / Keep warm		● / ●	● /	● /	● /		
Fast Preheating	●	●	●	●	●		●
PERFORMANCE & TECHNICAL INFORMATION							
Oven capacity[1] L	47	45	45	45	45	36	
Energy efficiency rating[1]	A+						
Energy consumption CircoTherm®[1]	0.61						
Energy consumption conventional[1]	0.73						
Time to cook standard load[1] mins	46						44
Largest baking sheet area[1] sq cm	1290	1290	1290	1290	1290		
Inverter technology[2]		●	●	●	●	●	
Maximum power Microwave (W)[3] / No. of power levels		900 / 5	900 / 5	900 / 5	900 / 5	900 / 5	900 / 5
Total connected load / Fuse Rating W	2990 / 13	3600 / 16	3600 / 16	3600 / 16	3600 / 16	1220 / 10	3350 / 16
Cable length cm	150	150	150	150	150	150	180
Turntable diameter mm							
Ceramic Glass Base							●
Water tank capacity litres							
STANDARD ACCESSORIES							
Wire shelves / Universal Pan	1 / 1	1 / 1	1 / 1	1 / 1	1 / 1	/ Glass tray	1 high & 1 low rack

[1] Measured according the EN50304, 65/2014. [2] For further information on inverter technology, please go to www.neffhome.com/uk. [3] For Inverter models, the maximum setting offers a time limited boost option for heating liquids. To ensure optimal results and to protect the appliance, the microwave power output is reduced in stages over the first few minutes down to the next power level (600W). After a cooling period, the microwave boost option will be available once more.

MICROWAVE OVENS

Style and convenience built-in

Our built-in microwaves fit seamlessly into your cabinetry. Depending on your chosen model, you'll enjoy handy automatic programmes that suggest ideal cooking times, a full touch TFT display, or a Memory Function that allows you to select your favourite settings with just one touch of a button. Selected microwaves also feature a grill, so you can finish off your comforting lasagne with a layer of beautifully golden cheese.

INVERTER TECHNOLOGY

Inverter Technology delivers microwave power constantly while cooking – other traditional microwaves are only able to deliver maximum power and manage the differing settings by alternating between on and off for specific time periods. This can result in uneven heating or overcooked food and can be especially damaging to more delicate foods or smaller portions.

With Inverter Technology, the microwave delivers power constantly, gradually managing the power levels down over time in order to control the food temperature. This gentle approach to cooking reduces uneven heating or overheated food and is especially beneficial for delicate foods. It may be necessary to adjust cooking times to ensure foods are thoroughly cooked before serving.

NEFF recommends that the maximum power setting be used for heating liquids and the microwave is calibrated to provide a burst of high power initially, before managing the power down in stages to the next level over the first few minutes.

C17GR00N0B

Compact Microwave Oven with Grill and left hinged door — N 70

Not recommended for in column installation with single or compact ovens

Touch key Shift Control

Microwave & Grill

KEY FEATURES

Cooking Functions	Shift Control	Maximum Microwave Power (W)	Number of Power Levels	Automatic Programmes	Capacity (Litres)
2		900	5	10	21

FAST AND VERSATILE

COLLECTION	N 70	N 70	N 70	N 70	N 50	N 50	N 50	N 50	N 50
TYPE	BUILT-IN MICROWAVE WITH GRILL	BUILT-IN MICROWAVE WITH GRILL	BUILT-IN MICROWAVE	BUILT-IN MICROWAVE	BUILT-IN MICROWAVE WITH GRILL	BUILT-IN MICROWAVE	BUILT-IN MICROWAVE	BUILT-IN MICROWAVE	BUILT-IN MICROWAVE
COLOUR									
Model Number Black glass with steel trim	C17GR00N0B	C17GR01N0B	C17WR00N0B	C17WR01N0B	HLAGD53N0B	HLAWD53N0B		HLAWD23N0B	
Model Number White glass with steel trim							HLAWD53W0B		
Model Number Stainless Steel									H53W50N3GB
OPERATION									
Touch Control with small TFT text display	●	●	●	●					
Rectractable control with push buttons					●	●	●	●	●
KEY FEATURES									
Microwave	●	●	●	●	●	●	●	●	●
Quartz Grill	●	●			●				
Microwave & grill combination	●	●			●				
Electronic Control	White TFT display	White TFT display	White TFT display	White TFT display	White LED display	White LED display	White LED display	White LED display	White LED Display
Automatic programmes	10	10	7	7	8	7	7	7	7
Stainless steel interior	●	●	●	●	●	●	●	●	●
PERFORMANCE & TECHNICAL INFORMATION									
Oven capacity L	21	21	21	21	25	25	25	20	17
Inverter technology[1]	●	●	●	●					
Maximum power Microwave[2] W	900	900	900	900	900	900	900	800	800
Number of Microwave power levels	5	5	5	5	5	5	5	5	5
Mircrowave distrbution	Stirrer	Stirrer	Stirrer	Stirrer	Turntable	Turntable	Turntable	Turntable	Turntable
Turntable diameter mm					315	315	315	255	245
Total connected load W	1990	1990	1220	1220	1450	1450	1450	1270	1270
Minimum fuse protection Amps	10	10	10	10	10	10	10	10	10
Cable length cm	150	150	150	150	130	130	130	130	130
GB plug	●	●	●	●	●	●	●	●	●
Side opening door	Left hinged	Right hinged	Left hinged	Right hinged	Left hinged	Left hinged	Left hinged	Left hinged	Left hinged
Control panel position	Below, horizontal	Below, horizontal	Below, horizontal	Below, horizontal	Right, vertical	Right, vertical	Right, vertical	Right, vertical	Right, vertical
Electronic touch button door opening	●	●	●	●					
Push button door opening					●	●	●	●	●
Installation position	Wall unit or Tall housing	Wall unit or Tall housing	Wall unit or Tall housing	Wall unit or Tall housing	Tall housing	Tall housing	Tall housing	Wall unit or Tall housing	Wall unit or Tall housing
STANDARD ACCESSORIES									
Glass turntable					●	●	●	●	●
Glass pan / Wire Grid	1 / 1	1 / 1							

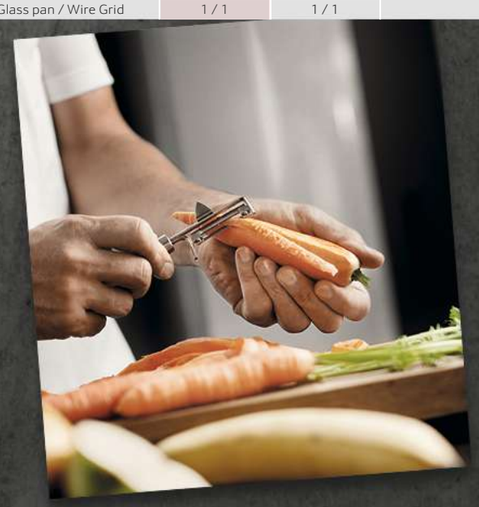

A HELPING HAND IN THE KITCHEN

We never underestimate the convenience of a microwave. Designed to complement with our selected single ovens, it's easy to create a cooking station which perfectly meets your needs.

[1]For further information on inverter technology, please go to www.neffhome.com/uk. [2]For Inverter models, the maximum setting offers a time limited boost option for heating liquids. To ensure optimal results and to protect the appliance, the microwave power output is reduced in stages over the first few minutes down to the next power level (600W). After a cooling period, the microwave boost option will be available once more.

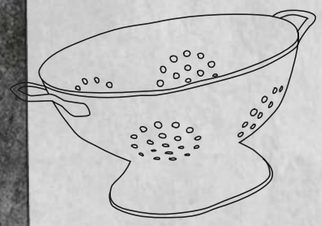

WARMING DRAWERS

Integrated convenience

With our 29cm warming drawer holding up to 40 plates, a larger size warming drawer is ideal for cooks who regularly entertain family and friends. If a slimmer version is more in-keeping with your space, our 14cm drawers also offer an impressive 12 plate capacity. With the option to melt chocolate, prove bread and keep your meals warm before serving, our warming drawers assist from prep to table.

N17HH20N0B
Warming drawer, compatible with **N 90** and **N 70** models

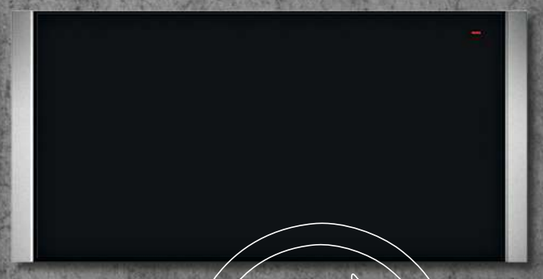

THE PERFECT KITCHEN ASSISTANT

Invaluable in any serious kitchen, our warming drawers help at every stage of the cooking process. Ideal for proving, melting, defrosting and keeping cooked meals and crockery warm, our warming drawers perfectly sit below our single and compact ovens.

Combine N 90/N 70/N 50 drawers with ovens and compacts from the same Collections.

COLLECTION	N70 / N90	N70 / N90	N70 / N90	N70 / N90	N70 / N90	N 50	N 50
TYPE	29CM HIGH WARMING DRAWER	14CM HIGH WARMING DRAWER	14CM HIGH WARMING DRAWER	14CM HIGH ACCESSORY DRAWER	14CM HIGH VACUUM DRAWER	29CM HIGH WARMING DRAWER	14CM HIGH WARMING DRAWER
BLACK GLASS WITH STEEL TRIM	N17HH20N0B	N17HH10N0B	N17HH11N0B	N17ZH10N0	N17XH10N0	N1AHA02N0B	N1AHA01N0B
KEY FEATURES							
Vacuum drawer					●		
Plate warming	●	●	●			●	●
Hold Warm	●	●	●			●	●
Defrost	●	●	●			●	●
Low temperature cooking	●	●	●				
Accessory drawer				●			
Operating indicator light	●	●	●		●	●	●
Electronic control	●	●	●		●		
Rotary temperature control dial	●	●	●			●	●
Touch Control					●		
Number of temperature settings	4	4	4			3	3
Number of vacuum seal time settings					3		
Number of vacuum sealing levels bags / containers					3 / 3		
Glass safety lid					●		
Maximum temperature °C	80	80	80			80	80
Minimum temperature °C	40	40	40			40	40
Toughened Glass Base	●	●	●				
PERFORMANCE & TECHNICAL INFORMATION							
INSTALL INDEPENDENTLY	●	●	●	●	●	●	●
Install with compact appliance	N70 / N90	N70 / N90	N70 / N90	N70 / N90	N70 / N90	N 50	N 50
Install with a single oven	N70 / N90	N70 / N90	N70 / N90	N70 / N90	N70 / N90	N 50	N 50
PushPull opening mechanism	●	●	Handle	●	●	●	●
Drawer interior volume L	52	20	20	21	8	58	23
Interior drawer dimensions HxWxD mm	242x468x458	95x468x458	95x468x458	102x468x458		250x475x490	100x475x490
Vacuum chamber dimensions HxWxD mm					95x275x210		
Installation in tall housing or under work surface	●	●	●	●	●	●	●
Maximum weight capacity kg	25	25	25	15	10	15	15
Total connected laoding W	810	810	810		320	400	400
Minimum fuse rating Amps	10	10	10		6	6	6
Cable length cm	150	150	150		150	150	150
GB plug	●	●	●		●	●	●
STANDARD ACCESSORIES							
Vacumming platform					●		
External vacumming adaptor, hose & plugs					●		
Sample vacuuming bags					●		
Antislip mat				●		●	●

BUILT-IN DOUBLE OVENS WITH CIRCO THERM®

The versatility of two cavities

With the convenience of two oven cavities, our built-in double ovens provide any Cookaholic with plenty of cooking space without impacting on kitchen design. Featuring NEFF's CircoTherm® technology in the main oven and Pyrolytic SelfCleaning in both, it's possible to cook different dishes on multiple levels without any intermingling of flavours or mess to clean up.

U2ACM7HN0B
Built-in Double Oven **N 50**

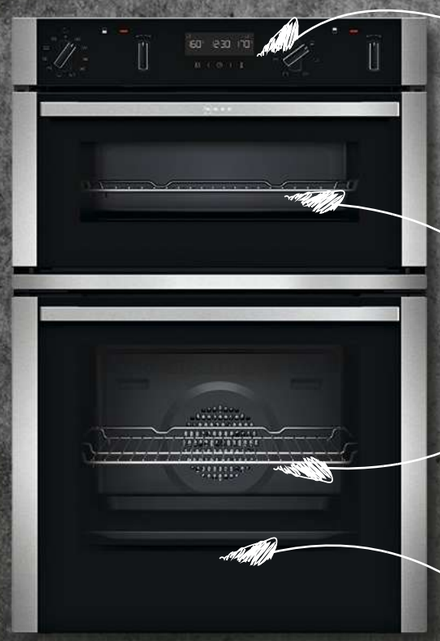

COLLECTION		N 50		N 50		N 50		N 50		N 50		N 50		N 50	
BLACK GLASS WITH STEEL TRIM		U2ACM7HN0B*		U1ACI5HN0B		U1ACE5HN0B		U1ACE2HN0B				J1ACE4HN0B		J1ACE2HN0B	
WHITE GLASS AND STEEL TRIM										U1ACE2HW0B					
OPERATION															
NEFF Design Rectractable controls, LCD display		●		●		●		●		●		●		●	
KEY FEATURES		Main	2nd	Main	2nd	Main	2nd	Main	2nd	Main	2nd	Main	2nd	Main	2nd
CircoTherm®		3D		3D		3D		3D		3D		3D		3D	
Pyrolytic cleaning		●	●												
EasyClean® / Base Clean		● /		● / ●		● / ●		● / ●		● / ●		● / ●		● / ●	
EcoClean® liners (Roof/Back/Sides)				roof / back / sides	roof / back / sides	roof / back / side	roof / back / sides					back	roof / back / sides		
Electronic control		●	●	via Meat probe											
Meat Probe		●													
Telescopic Rails		1 x Clip Rail		1 x Clip Rail		1 x Clip Rail		1 x Clip Rail		1 x Clip Rail		1 x Clip Rail		1 x Clip Rail	
ADDITIONAL FUNCTIONS		Main	2nd	Main	2nd	Main	2nd	Main	2nd	Main	2nd	Main	2nd	Main	2nd
CircoTherm® Gentle		●		●		●		●		●		●		●	
Top/bottom heat / Bottom heat only		● / ●	● / ●	● / ●	● / ●	● /	● / ●	● /	● / ●	● / ●	● / ●	● /	● / ●
Circo Roasting		●		●		●		●		●		●		●	
Full surface / Centre surface grill		● /	● / ●	● /	● / ●	● /	● / ●	● /	● / ●	● /	● / ●	● /	● / ●
Bread baking		●													
CircoTherm® Intensive (Pizza Setting)		●		●						●		●			
Fast preheating		●		●		●		●		●		●		●	
FEATURES		Main	2nd	Main	2nd	Main	2nd	Main	2nd	Main	2nd	Main	2nd	Main	2nd
Energy efficiency index[1]		95.3	120.3	95.3	120.3	95.3	120.3	95.3	120.3	94.7	120.3	94.7	120.3
Energy efficiency class[1]		A	B	A	B	A	B	A	B	A	B	A	B
Energy consumption CircoTherm[1]	kWh	0.81		0.81	-	0.81	-	0.81	-	0.71	-	0.71	-
Energy consumption conventional[1]	kWh	1.02	0.83	1.02	0.83	1.02	0.83	1.02	0.83	0.84	0.83	0.84	0.83
Oven capacity[1]	L	71	34	71	34	71	34	71	34	47	34	47	34
Time to cook standard load[1]	mins	44	44	44	44	44	44	44	44	45	45	45	45
Largest baking sheet area[1]	sq cm	1290		1290		1290		1290		1290		1290	
Total connected load / Fuse Rating	W	6300 / 32		5900 / 32		5900 / 32		5900 / 32		5300 / 25		5300 / 25	
STANDARD ACCESSORIES		Main	2nd	Main	2nd	Main	2nd	Main	2nd	Main	2nd	Main	2nd
Wire shelves / Universal full width pan		3 / 1		3 / 1		3 / 1		3 / 1		2 / 1		2 / 1	

*U2ACM7HN0B will be replaced with U2ACM7HH0B to include Home Connect feature in Winter 2020.

[1] According to Regulation (EU) No 65/2014 (models with integral microwave or steam only are exempt).

TOP OVEN
KEY FEATURES

Cooking Functions 4 | Pyrolytic | Energy B | Efficient with NEFF

MAIN OVEN
KEY FEATURES

Cooking Functions 8 | CircoTherm® | CircoTherm® Gentle | Pyrolytic | Single Point Meat Probe | Clip Rails | Energy A | Efficient with NEFF

A HOB FOR EVERY COOKING STYLE

THE HOB COLLECTIONS

Because every cook has their own unique style

Choosing the right hob to complement your kitchen and cooking style can be challenging. At NEFF we understand the importance of creating a premium, seamless kitchen with appliances that are designed to coordinate with one another. To help you select the perfect kitchen companion, we've categorised all our hobs into easy-to-follow Collections based on product features, control display and design.

N 90

STYLES OF HOBS

- Venting
- FlexInduction
- Gas on Glass

ELECTRIC

THIS COLLECTION CAN INCLUDE*:-

- TFT Control
- TwistPad® Fire Control
- Premium glass on steel frame
- Hob Hood Control
- Extended FlexInduction
- FlexInduction
- Power Move
- Power Transfer

GAS

THIS COLLECTION CAN INCLUDE*:-

- FlameSelect®
- Dual Wok Burner
- LED power level display
- Residual heat indicator
- Premium ceramic glass on steel frame
- Cast iron pan supports

N 70

STYLES OF HOBS

- Venting
- FlexInduction
- Quick-Light
- Gas on Steel with black inlay

ELECTRIC

THIS COLLECTION CAN INCLUDE*:-

- TwistPad® Control
- Touch Control
- Bevelled edge glass
- FlexInduction
- Power Move
- Power Transfer

GAS

THIS COLLECTION CAN INCLUDE*:-

- FlameSelect®
- LED power level display
- Residual heat indicator
- Tempered glass/steel with black inlay
- Cast iron pan supports

N 50

STYLES OF HOBS

- CombiZone Induction
- Quick Light
- Gas on Steel

ELECTRIC

THIS COLLECTION CAN INCLUDE*:-

- Touch Control
- Bevelled edge glass
- CombiZone induction
- Ring Zones

GAS

THIS COLLECTION CAN INCLUDE*:-

- Cast iron supports
- Cast iron finish supports

N 30

STYLES OF HOBS

- Induction
- Quick Light
- Gas on Steel

ELECTRIC

THIS COLLECTION CAN INCLUDE*:-

- Control Dials
- Frameless design
- Induction technology
- Ring Zones

GAS

THIS COLLECTION CAN INCLUDE*:-

- Enamel pan supports

*The features included in each collection are an overview only. Please ensure that you check the product detail for exact features of each model.

A HOB FOR EVERY COOKING STYLE

Rethink cooking in NEFF's infinite kitchen

A great meal is all about the ingredients and cooking process. And it's the same when it comes to choosing the right hob. If you want flexibility, an electric FlexInduction hob might be what you're after. Or pick one of our innovative gas or fast induction hobs. Can't decide which one? Then the Domino range might be the best hob for you, as it mixes all of the above. There's a NEFF hob for anyone to get creative with.

VENTING HOBS

The 2-in-1 Hob and Hood is here. With freedom from a conventional wall or island hood, our integrated cooktop ventilation allows you to reclaim your space in the kitchen. Offering a FlexInduction cooking surface with powerful extraction, the NEFF Venting Hob is set to create the stylish and sociable kitchen you've always dreamt of.

T58TL6EN2 N90 Venting Hob

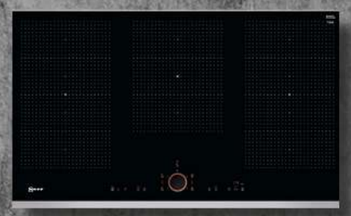

FLEX INDUCTION HOBS

For sociable cooks who often find themselves juggling multiple pans, a FlexInduction hob provides any size pan, anywhere cooking within the zones. When the zones are activated, pans will receive instant, even and rapid heat transference wherever they are placed. Most hobs within the FlexInduction range are controlled by our innovative and stylish TwistPad Fire® removable and illuminated magnetic dial.

T59TS61N0 N90 FlexInduction Hob with TwistPad Fire®

INDUCTION HOBS

If sleek, stylish and clean lines are more in keeping with your kitchen design, our Induction hobs provide a minimalistic and premium look whilst providing a quick and responsive cooking surface. Cooking with an Induction Hob saves energy and is incredibly safe – there is little residual heat once the saucepan is removed from the hob.

T36FB40X0 N50 Induction Hob

CERAMIC HOBS

With their frameless design, our Ceramic hobs standout in any kitchen, and a whole range of options with up to 17 power settings makes preparing the next feast as easy as pie. Better still, our enhanced touch control panel provides full flexibility over your cooking.

T16FD56X0 N50 Ceramic Hob

DOMINO HOBS

Our domino hobs can be mixed and matched to create a cooking station that's all your own. With gas (30cm), Quick-Light ceramic (30cm), FlexInduction (30cm) and Teppan Yaki (40cm) hobs within the range, our Domino hobs can be linked to provide the ultimate versatile cooking experience.

N53TD40N0, N23TA29N0 Domino Hobs

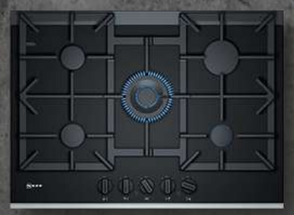

GAS HOBS

For traditionalists who prefer to see exactly how much heat is delivered to their pans, gas cooking provides a robust and reliable way to prepare your favourite dishes. You can control your hob by numbers and not by eye with our precise and responsive FlameSelect® heat control feature, available across selected gas hobs.

T27TA69N0 N90 Gas Hob

FINISHES

Ceramic & Induction Hobs

Premium glass on stainless steel trim

Bevelled design trim

Frameless with front bevel

Flushline

Gas Hobs

Ceramic Glass on stainless steel trim

Black tempered glass

Stainless steel finish with panel insert

Steel

Black finish

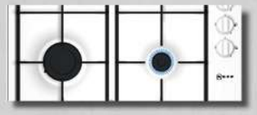

White finish

We strive to maintain a range of hobs with sizes and finishes to suit all requirements. Choose from a number of options including colour trimmed models to match other NEFF appliances, or variations that blend in naturally with the worktop.

EFFICIENCY

Induction hobs are particularly energy efficient, using around 30% less energy than gas or ceramic hobs. The energy goes directly to the pans and the food inside them, so that almost no energy is lost. And because the heat needed is available much quicker, induction uses less energy than other fuel types.

SAFETY

People have used gas for decades as a quick, easy and safe means to cook. However, constantly changing international standards have brought safety into clearer focus, and as a result we've incorporated effective safety features into many of our gas hobs, like flame control, explained on page 49.

CLEANING

The easiest hobs to clean are ceramic and induction models. Their smooth flat surface is easy to wipe down, and because the temperature of the glass is much lower than other hob types, spillages do not burn on and can be quickly cleaned up.

60CM PLUG&PLAY HOB

The **T36FB41X0G** is a frameless induction that is designed to work off a standard 13amp plug. This gives the flexibility of being able to install an Induction hob without the need for hard wiring. If you are looking to switch a 60cm hob this is a simple appliance to install.

A HOB TO SUIT EVERY CHEF

UNDERSTANDING INDUCTION COOKING

Heat adjustment at your fingertips

An induction hob provides one of the most efficient methods of cooking. Extremely fast, with the ability to accurately control the power, induction hobs contain a strong electromagnet positioned under the surface of the hob. When a zone is activated and a ferrous metal pan is placed on it, a circuit is created which begins a rapid, even transference of heat to the base of the pan and its contents.

KEY HOB CONTROL FEATURES

AN INDUCTION HOB WILL BOIL A PAN OF WATER ALMOST TWICE AS FAST AS A GAS HOB

FULL TOUCH CONTROL TFT DISPLAY
Exciting and intuitive interaction with the first full-touch TFT FlexInduction hob from NEFF. Simply touch the large colour TFT display on the hob to select the cooking area, choose the power level, and access much more to bring your cooking to life.

TWISTPAD® FIRE
A clever, removable magnetic control dial which includes a stylish illuminating feature. Available across premium FlexInduction hobs.

TWISTPAD®
A clever, removable magnetic control dial available across selected FlexInduction and Induction Hobs.

Touch Control
Simply select a zone then swipe your finger across the control panel to select a heat mode.

Bevelled oval controls
Featured on most Domino hob models and various ceramic hobs.

HEATING UP TIMES OF DIFFERENT HOBS

Heating up times from 15°C to 90°C according to EN 50304/ EN 60350: 2009 Fissler Original Profi Collection cookware

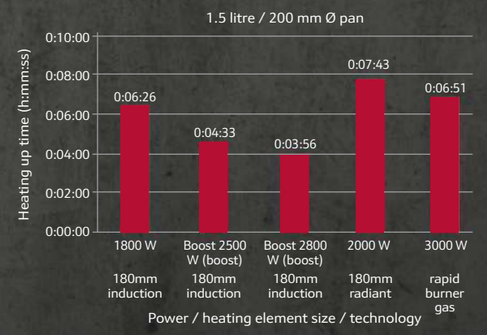

INDUCTION HOBS FEATURES & FUNCTIONS

Because every cook has their own unique cooking style

For entertainers, professional cooks or large families, induction cooktops provide a fantastic solution to demanding cooking requirements. The modern design, with clear print lines, supports a variety of pan sizes while reflecting a minimalistic design trend. Proud of its innovations in Induction Cooking, NEFF has a range of features and functions to suit every cooking style.

KEY FEATURES & FUNCTIONS

HOB HOOD CONTROL – Allows you to manage the settings for both the hob and hood, directly from the hob itself.

FLEX INDUCTION – By using a different arrangement of induction coils to cover a wider area, entire zones can be activated and pans placed anywhere within that zone will receive instant, even heat transference.

EXTENDED FLEX INDUCTION – Offering the same benefits as the FlexInduction, extended zones allow you to cook a variety of large roasters and accessories up to 40cm and pots up to 30cm in length.

POWER TRANSFER – Move pots anywhere in the double FlexZone and the setting will automatically move with them. All it takes is one single touch of a button.

POWER MOVE – Divide the hob into three heat zones, each with a different power level so you can easily move a pot between an intense heat at the front, simmering in the middle and a low, keep-warm temperature at the back.

COMBIZONE - Individual yet flexible cooking areas can be used independently or linked together to create an expanded cooking zone large enough for Teppan Yaki plates casserole dishes and griddle pans.

FRYING SENSOR - With 5 selectable temperature settings that hold levels of heat steady, FryingSensor ensures that there's no more burning.

ADDITIONAL FEATURES & FUNCTIONS

MOVE MODE – Utilise the front of your hob to simmer and the back to boil and use either by moving the pan across the zones- by using move mode you can set different temperatures across combi and flex induction Zones.

CONTROL PANEL LOCK – A useful safety feature, just switch on the control panel lock to make sure children can't play with the controls.

RESIDUAL HEAT INDICATORS – Primarily a safety feature – 'H' means it's hot enough to continue cooking; 'h' means it's not hot enough to cook, but too hot to touch.

QUICK START – Allows for a quick and immediate start to the cooking process as the hob detects the pan, which then activates the zone.

CONTROL PANEL SUSPENSION – Activates a freeze setting at the touch of a button, allowing the hob to be wiped clean easily and safely.

SAFETY CUT-OUT FACILITY – For added peace of mind, our induction hobs feature a safety cut-out facility which activates if the hob has been in constant use but no settings have been changed for a period of time.

RESTART – Provides full control over the hob by recalling the current used setting for up to four seconds if the hob has been unintentionally switched off by simply pressing the main switch.

Featured model:
T58TL6EN2 N90 Venting Hob

VENTING HOBS

The 2-in-1 hob and hood

With freedom from a conventional wall or island hood, our Venting Hob allows you to reclaim your space in the kitchen. Offering a FlexInduction cooking surface with a powerful, built-in extraction mechanism, the NEFF Venting Hob is set to create the tasteful and modern kitchen that you've always dreamt of. Premium features such as our innovative and stylish magnetic control dial TwistPad® Fire, Double FlexInduction, Hob Hood Control & Power Move come as a standard.

A KITCHEN TO BREATHE IN

Selected Venting Hob models offer the following:

Key Design Features

- 80cm Width
- Double FlexInduction
- TwistPad® Fire

Performance Features

- PowerMove
- PowerTransfer
- FryingSensor
- Hob Hood Control

DOUBLE FLEX INDUCTION

Move your pots and pans anywhere within the FlexZone. Their size and shape are automatically detected and heat is applied at their exact location.

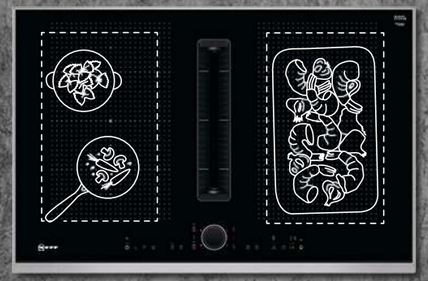

POWER TRANSFER

Move pots anywhere in the double FlexZone and the setting will automatically move with them. All it takes is a single touch of a button.

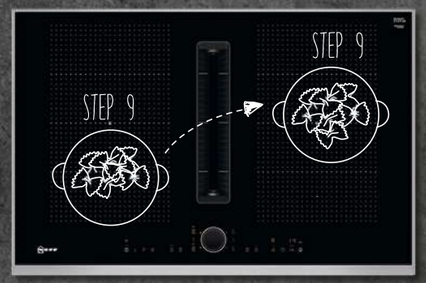

POWER MOVE

Divide the hob into three heat zones, each with a different power level so you can easily move a pot between intense heat at the front, simmering in the middle and a low, keep-warm temperature at the back.

FLEX INDUCTION HOBS

Innovations in flexible cooking

With the majority of Flex Induction hobs featuring TwistPad® operation, simply point and twist the removable dial towards your cooking zones to activate, or upgrade to the TwistPad® Fire and control both the hob and hood settings on your integrated appliance. Once you've finished cooking, the magnetic dial can simply be removed for a sleek, premium cook top finish. If you're looking for the ultimate feature navigation, choose a FlexInduction hob with our innovative large high-resolution colour TFT display. Available on selected models, our most premium control display guides you easily through the menu, and its high contrast screen makes for a stunning worktop design.

FLEX INDUCTION IS PERFECT FOR ANY SIZE PAN, ANYWHERE COOKING

FLEX INDUCTION EXPLAINED

By using a different arrangement of induction coils to cover a wider area, entire zones can be activated and pans placed anywhere within that zone will receive instant, even heat transference. This will put an end to juggling hot pans for space on the hob when cooking large dinners or multiple meals.

FlexInduction uses the same basic technology as standard NEFF induction hobs, which means these models also benefit from significantly lower surface temperatures. Because the entire space can be used efficiently, pans can be placed towards the rear of the zones, lessening the likelihood of accidents due to protruding handles. This makes FlexInduction one of the safer options for families with toddlers or young children.

Our FlexInduction design layout offers a larger zone (approximately 24 x 40cm) to cater for bigger pans, presenting more flexibility in pan size selection and positioning.

TwistPad® fire

Featuring a unique, illuminated and removable dial, our TwistPad® Fire control feature has been designed to react to pans bubbling away quickly and easily. Simply point and twist the clever magnetic dial towards your cooking zones to activate and adjust the heat accordingly.

Available with selected FlexInduction hobs, TwistPadFire® makes controlling your hob easier, and more stylish, than ever before.

Available on selected FlexInduction and Venting Hobs.

INDUCTION HOBS

Fast and flexible

Are you fond of exploring new and untried recipes and tastes? Our range of induction hobs let you indulge each and every second of the cooking experience. Featuring innovative performance and design features such as CombiZone, FryingSensor and Touch Control, our Induction hobs deliver heat directly to where you need it and offer a sleek, stylish look to any kitchen.

WHY CHOOSE INDUCTION COOKING

STYLISH

Ceramic induction hobs are sleek, shiny and smooth – they complement the minimal, uncluttered lines of today's stylish kitchens.

FAST

The speed of induction cooking is one of its major benefits. Cooking zones heat up remarkably quickly and if a boost of power is required it can be easily transferred from zone to zone.

RESPONSIVE

Induction hobs are extremely controllable; as soon as a saucepan is removed it breaks the circuit and diffuses heat instantly.

Featured Model: T48PD23X2 N50 80cm Induction Hob

EASY TO USE

The flat, non-porous surface can be wiped over quickly, with areas around the circular zones remaining cool even during cooking. That way, if food spills or boils over it won't ever get burnt on to the surface.

ENERGY EFFICIENT

Induction hobs are extremely energy efficient with the added advantage of saving money on electricity bills. The precise amount of energy needed is only ever used as just the base of the pan heats up.

SAFE TO USE

A feature on all of our induction hobs, automatic pan recognition 'senses' and subsequently only heats up saucepans with a smooth, flat base, suitable diameter and ferrous metal content. This ensures that the hob will not heat up items like metal spoons accidentally left on induction zones, for added peace of mind.

Note: Only saucepans made of ferrous metal are suitable for use on our induction hobs

DOMINO HOBS

Bespoke solutions for creative cooks

Our Domino hobs can be mixed and matched to create a cooking station that's all your own. With gas (30cm), Quick-Light ceramic (30cm), FlexInduction (30cm and 80cm) and Teppan Yaki (40cm) hobs within the range, our Domino hobs can be linked to provide the ultimate cooking experience. If you know exactly how you like to cook but prefer an additional zone for those speciality dishes, it's also possible to mix a full sized hob with an extra Domino zone.

HOW DO YOU LIKE TO COOK?
WITH NEFF DOMINO HOBS, THE OPPORTUNITIES ARE ENDLESS...

DOMINO DOUBLE

DOMINO HOB + GAS DOMINO HOB

Example combination, Double
Combination shows a FlexInduction Domino Hob with a Domino Gas Hob.

DOMINO TRIPLE

DOMINO HOB + TEPPAN YAKI + GAS DOMINO HOB

Example combination, Triple
Combination shows a FlexInduction Domino Hob, Teppan Yaki and a Domino Gas Hob.

FLEXINDUCTION

FLEX INDUCTION HOB + TEPPAN YAKI

Example combination, Hob
Combination shows a 80cm FlexInduction Hob with Teppan Yaki.

USING A GAS HOB

The original re-imagined

Cooking with gas is a tried and tested medium. Its reliability, responsiveness and versatility have earned it the loyalty of both amateur and professional cooks alike. Our new range of gas hobs now feature FlameSelect®, innovative technology that gives you more control options to select precise heat to suit whatever your are cooking.

BECAUSE IT'S SO RESPONSIVE AND CONTROLLABLE, GAS IS STILL THE NUMBER ONE CHOICE FOR MANY NEFF CUSTOMERS.

THE NEFF GAS HOB RANGE

With gas, each pan requires its own burner to receive heat, so consideration needs to be taken over the average usage that the hob will receive and how many burners are going to be used. We provide three widths of gas hob, with a range of four and five gas burners. Some come with a larger wok burner as standard, but many models have a wok support available as an accessory.

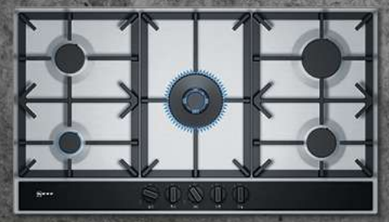

90cm 5 burner extra-wide hob

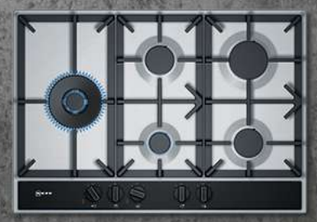

70cm 5 burner wide hob

60cm 4 burner hob

BENEFITS OF A CERAMIC GLASS GAS HOB

Ceramic glass gas hobs feature a range of additional benefits over tempered glass hobs. In terms of safety, they have extra heat resistance and are ultra durable. They feature low-profile, one-piece burners which clean easily and always look trim and streamlined. The glass used is also exceptionally strong which keeps the thickness down to just 4mm. Finished with high precision, bevelled edges and mounted on a steel frame, they come complete with pan supports.

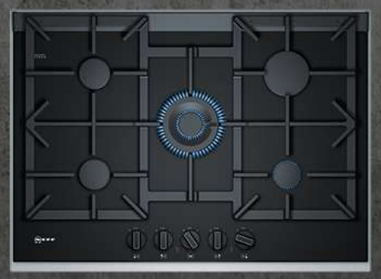

FLAME SELECT®

Gas cooking has never been more precise

With FlameSelect®, the gas flame adapts to the dish and not the other way around. Whether you're searing a steak, boiling pasta, or simmering a roast, you can set the heat just as you would with an electric hob. Select one of the 9 heat levels available and you can see how the flame becomes larger or smaller just as you need it. For the first time ever, cooking with gas is as easy as cooking on an electric hob.

CONTROL YOUR HOB BY NUMBERS, NOT BY EYE

FLAMESELECT®

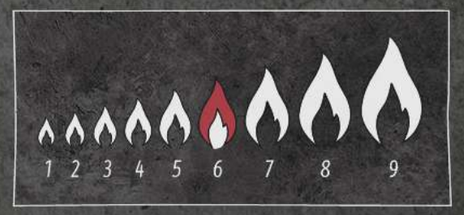

HOW DOES IT WORK?

With innovative and patented valve technology, our FlameSelect® gas hobs can regulate the gas output precisely in levels from 1 to 9. The power levels can then be set in proportional steps exactly like the power setting of an electric hob. Additionally, the control dials are accentuated with printed numbers in order to clearly highlight the chosen power levels.

THE FIRST GAS HOB TO ADAPT ITSELF TO ANY DISH

GAS HOBS FEATURES & FUNCTIONS

A true favourite amongst passionate cooks

Searing, boiling and flambéing on flames resonates with the primal cook in all of us. NEFF gas hobs combine the style and reliability that cooks expect from this powerful method of cooking. Proud of its innovations in Gas Cooking, NEFF has a range of features and functions to suit every cooking style.

KEY FEATURES & FUNCTIONS

FLAMESELECT® – Cook everything just right with 9-level FlameSelect®. With FlameSelect® the gas flame adapts to your cooking, offering precise control every time. For the first time ever, cooking with gas is as easy as cooking on an electric hob.

POWER LEVEL DISPLAY – Some gas hobs benefit from a host of features that are usually found on ceramic hobs, including an LED display. The residual heat indicator displays if there is any residual heat on the hob. In the event of a problem with the individual burner the indicator lights also act as warning lights.

HIGH SPEED BURNERS – Provide a surge of extra power; particularly useful for boiling a large pan of water quickly.

WOK BURNER – The secret of Chinese stir fry cooking is heat and speed. Our Domino wok (N23TA29N0) delivers 6.0kW, one of the most powerful on the market.

FLAME CONTROL – The flame failure safety device shuts down the supply of gas to the hob if the flame goes out for any reason. The automatic reignition uses a heat sensor to detect if the flame goes out and, if so, will automatically attempt to reignite.

CAST IRON PAN SUPPORTS – Firmly hold the pan above the flame, leaving space between the base and the burner. They're used on the majority of our models because of their robust and sturdy nature and tolerance to prolonged contact with heat.

EASY GRIP CONTROLS – Ergonomically designed to be gripped and turned easily, even with wet or greasy hands.

SIMMER SETTING – Excellent for slow simmering, almost all of our gas hobs have a very low burner with a maximum of just 1.0kWh.

HOB ACCESSORIES

We've carefully designed a range of cooking accessories to allow you to get the most out of your hob. From robust saucepans to creative cooking solutions for our FlexInduction hobs, there's lots of ways to try something new with NEFF.

ALL THE TOOLS FOR ANY EAGER COOKAHOLIC

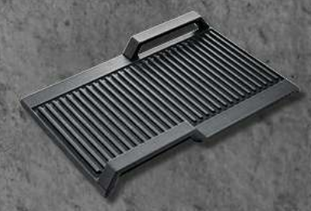

Z9416X2 (accessory number)
00576158 (part number)

FLEX INDUCTION ACCESSORIES

Spanning the length of your FlexInduction zone, our accessories are designed to inspire you in the kitchen. From everyday cooking to theatrical displays, there's an accessory to bring out the best in your favourite dishes.

GRIDDLE PLATE

Ideal for cooking steaks, fish, flatbreads and sliced vegetables, an induction griddle plate offers considerably more flexibility than a standard square griddle pan. All accessories within our induction range are easy to clean and dishwasher safe.

Surface area: 41.5 x 26.5cm

Z9417X2 (accessory number)
00575951 (part number)

TEPPAN YAKI

Inspired by Japanese cooking, our Teppan Yaki plates are a stylish way to cook meat, fish and vegetables. Ideal for sociable cooking, Teppan Yaki plates provide even heat transference for delicious, impressive dishes.

Surface area: 41.5 x 26.5cm

SAUCEPANS

Ferrous metal saucepans are required for use on an induction hob. To check if a saucepan can be used with an induction hob use our quick magnetic test shown below. NEFF saucepans have been tried and tested to ensure that they offer optimum performance with NEFF hobs.

Magnetic base

In most cases if the magnet sticks, the pans are made from ferrous metal and are therefore likely to be suitable for use on induction hobs.

Z943SE0 (accessory reference)
00576026 (part number)

OVAL ROASTER AND STEAMER RACK

With our roaster and steam accessory, it's possible to steam on a NEFF induction hob too. Ideal for preparing delicate fish and vegetables, steam cooking is a great way to prepare healthy, nutritious dishes. Oven and dishwasher safe.

Z9410X1 (roaster accessory number)
00573879 (roaster part number)

Z9415X1 (steam rack accessory number)
00576118 (steam rack part number)

VENTING HOBS

The 2-in-1 hob and hood is here

Discover our new range of Venting Hobs, designed with flexibility in mind. With more options to use and install, packed with features, and phenomenally quiet too, you just need to focus on creating.

T58TL6EN2
Flex Induction Venting Hob **N 90**

Integrated hood

Flex Induction zone

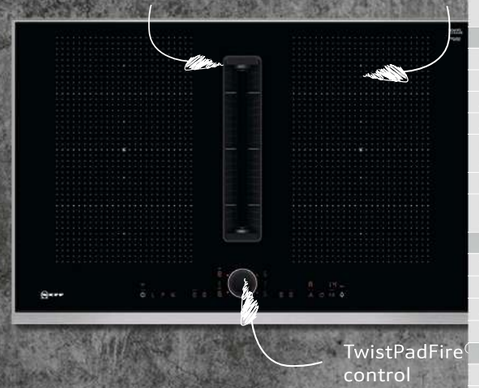

TwistPadFire® control

DESIGN PERFORMANCE

T48TD7BN2
Flex Induction Venting Hob **N 70**
(702mm model also available **T47TD7BN**)

Integrated hood

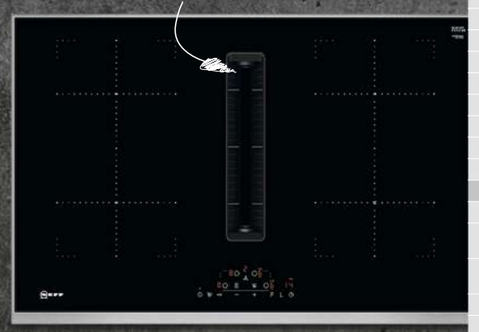

DESIGN PERFORMANCE

HOB TYPE		VENTING HOBS		
COLLECTION		N 90	N 70	N 70
MODEL NO.		T58TL6EN2	T48TD7BN2	T47TD7BN2
DESIGN				
Width	mm	826mm	826mm	708mm
Control position/type		Front/ TwistPadFire®	Touch Control	Touch Control
Style		Premium Glass on Steel	Premium Glass on Steel	Premium Glass on Steel
KEY FEATURES				
Home Connect		●		
Integrated extractor		●	●	●
Automatic extraction		Fully sensor based	Auto-On	Auto-On
Frying Sensor		5 settings	4 settings	4 settings
Digital display		●	●	●
Power Move		3 stages	2 stages	2 stages
Power Transfer automatic setting transfer		●		
Flex Induction		●		
Number of Flex Induction zones		2		
Combi Zone Induction			2: Left & Right	2: Left & Right
HOB FEATURES				
Number of individual zones		4	4	4
Power levels / Power Boost		17 / ●	17 / ●	17 / ●
Energy Consumption Display		●	●	●
Timer with automatic switch off for each zone / Count up Timer		● / ●	● /	● /
HOOD FEATURES				
Climate Control sensor		●		
Power levels		17 + 2 Intensive	17 + 1 Intensive	9 + 2 Intensive
Automatic intensive revert setting		6 minutes	6 minutes	6 minutes
Automatic after running		12 / 30 minutes	30 minutes	12 / 30 minutes
Dishwasher safe grease filter cassette with spillage collection		Yes - 200ml capacity	Yes - 200ml capacity	Yes - 200ml capacity
Dishwasher safe spillage overflow collector		700ml capacity	700ml capacity	700ml capacity
Electronic grease filter / cleanAir filter saturation indicators		● / ●	● / ●	● / ●
SAFETY FEATURES				
Two stage residual heat indicators		●	●	●
Safety lock		●	●	●
Automatic pan recognition		●	●	●
Timed safety switch off		●	●	●
PERFORMANCE / TECHNICAL INFORMATION – HOB				
Nominal voltage / Maximum power output	V / W	220-240 / 7,400	220-240 / 7,400	220-240 / 7,400
Electrical cable length	cm	110	110	110
Rear left flex Induction zone	kW/mm	2.20 200x240	2.20 190x210	2.20 190x210
Rear right flex Induction zone	kW/mm	2.20 200x240	2.20 190x210	2.20 190x210
Front left flex Induction zone	kW/mm	2.20 200x240	2.20 190x210	2.20 190x210
Front right flex Induction zone	kW/mm	2.20 200x240	2.20 190x210	2.20 190x210
flex Induction zone left	kW/mm	3.30 400x240	3.60 380x210	3.60 380x210
flex Induction zone right	kW/mm	3.30 400x240	3.60 380x210	3.60 380x210
Rear left / right zone – with Power Boost	max. kW	3.70 / 3.70	3.70 / 3.70	3.70 / 3.70
Front left / right zone – with Power Boost	max. kW	3.70 / 3.70	3.70 / 3.70	3.70 / 3.70
PERFORMANCE / TECHNICAL INFORMATION – EXTRACTOR				
Extractor energy efficiency rating		B	B	B
Extraction Rate in m³/h[1,2]				
Ducted / Recirculating power level Minimum		154 / 150	169 / 139	153 / 161
Ducted / Recirculating power level Maximum		500 / 500	551 / 557	500 / 528
Ducted / Recirculating power level Intensive		622 / 615	684 / 618	622/ 644
Noise level (sound power) based on dB(A) re 1 pW[1,3]				
Ducted / Recirculating power level Minimum		42 / 41	42 / 41	42 / 41
Ducted / Recirculating power level Maximum		69 / 68	69 / 68	69 / 68
Ducted / Recirculating power level Intensive		74 / 72	74 / 72	74 / 72
Motor power	W	170	170	170
OPTIONAL ACCESSORIES				
Set of three pans		Z943SE0	Z943SE0	Z943SE0
Rectagular roasting pan with lid (approx. 320x200mm)		Z9410X1	Z9410X1	Z9410X1
Steamer pan insert of use with Z9410X1 roasting pan		Z9415X1	Z9415X1	Z9415X1
Teppan Yaki (approx. 400x200mm)		Z9418X0	Z9418X0	Z9418X0
Griddle plate (approx. 400x200mm)		Z9416X2	Z9416X2	Z9416X2
Ducted operation using accessory kit		Z811DU0	Z811DU0	Z811DU0
Recirculating operation: cleanAir 'Unducted' Kit accessory		Z821UD0	Z821UD0	Z821UD0
Recirculating operation: cleanAir 'Partly Ducted' Kit accessory		Z821PD0	Z821PD0	Z821PD0
Recirculating operation: Full Kit and cleanAir filter accessory				

[1] Air flow and noise declarations made in line with CECED Code Of Conduct. [2]Measured according to EN61591 on largest pipe diameter. [3]Sound power measured according to EN60704-3 on largest pipe diameter.

FLEX INDUCTION HOBS

The joy of flexible cooking

Flex Induction offers creative cooks the ultimate freedom. With enlarged cooking spaces, the whole zone becomes you cooking canvas. Enjoy innovative controls such as the large high-resolution colour TFT display that guides you easily through the menu, and its high contrast screen makes for excellent legibility.

T59TF6RN0
Flex Induction Hob **N 90**

3 Flex Induction zones

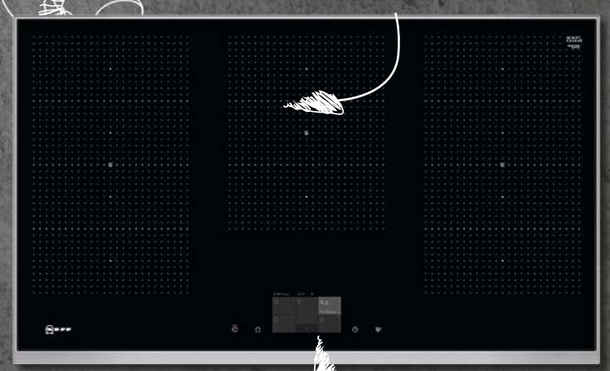

TFT DISPLAY

DESIGN PERFORMANCE

T68TF6RN0
Flex Induction Hob **N 90**

2 Flex Induction zones

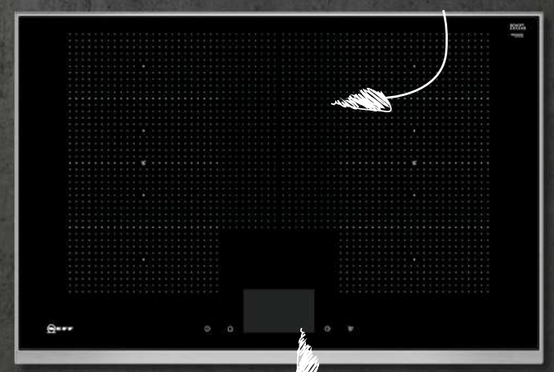

TFT DISPLAY

DESIGN PERFORMANCE

HOB TYPE		FLEX INDUCTION HOB			
COLLECTION		N 90		N 90	
MODEL NO.		T59TF6RN0		T68TF6RN0	
DESIGN					
Width	mm	918mm		826mm	
Control position / type		Front / TFT Control		Front / TFT control	
Style		Premium glass on steel		Premium glass on steel	
KEY FEATURES					
Home Connect		●		●	
Hob-Hood Control		●		●	
5" Full Touch colour display with Dish Categories		●		●	
Power Move		3 stages		3 stages	
Automatic setting transfer		●		●	
Frying Sensor		5 settings		5 settings	
Power Boost		●		●	
Pan Boost		●		●	
Number of Flex Induction zones		3		2	
Extended Flex Induction Zone				2	
Number of Combi Induction zones					
FEATURES					
Number of individual zones		5		4	
Power levels		17		17	
Digital display		●		●	
Timer with automatic switch off for each zone		●		●	
Count up Timer		●		●	
QuickStart					
Energy Consumption Display		●		●	
PERFORMANCE / TECHNICAL INFORMATION					
Nominal voltage	V	220-240		220-240	
Maximum power output	W	11,100		7,400	
Electrical cable length	cm	110		110	
GB plug					
Rear left Flex Induction zone	kW/mm	2.20	200x240	2.20	200x230
Rear left zone	kW/mm				
Rear right Flex Induction zone	kW/mm	2.20	200x240	2.20	200x230
Rear right zone	kW/mm				
Rear centre zone	kW/mm	2.60	300x240		
Front centre zone	kW/mm				
Front left Flex Induction zone	kW/mm	2.20	200x240	2.20	200x230
Front left zone	kW/mm				
Front right Flex Induction zone	kW/mm	2.20	200x240	2.20	200x230
Front right zone	kW/mm				
Flex Induction zone left	kW/mm	3.30	400x240	3.30	400x230
Flex Induction zone right	kW/mm	3.30	400x240	3.30	400x230
Extended Flex Induction rear left	kW/mm			3.30	300x300
Extended Flex Induction rear right	kW/mm			3.30	300x300
Rear left zone – with Power Boost	max. kW	3.70		3.70	
Rear right zone – with Power Boost	max. kW	3.70		3.70	
Rear centre zone – with Power Boost	max. kW	3.70			
Front centre zone – with Power Boost	max. kW				
Front left zone – with Power Boost	max. kW	3.70		3.70	
Front right zone – with Power Boost	max. kW	3.70		3.70	

All models comply with COMMISSION REGULATION (EC) No 1275/2008 with regard to ecodesign requirements for standby and off mode electric power consumption. 14.6kW power output (20A); Current management options for 16A, 13A or 10A connection. *MasterPartner® and AAR product only.

FLEX INDUCTION HOBS

Point, twist and remove for cleaning – TwistPad® offers the ultimate control

Our Flex Induction hobs are created to respond to your way of cooking. Delivering heat exactly where it's needed, Flex Induction is a truly liberating way to prepare your favourite dishes. With a range of griddle pans and Teppan Yaki grill plates available from the NEFF online store, creative cooking has never been easier. With the majority of Flex Induction hobs featuring TwistPad® operation, simply point and twist towards your cooking zones to activate, or upgrade to the TwistPadFire® and control both the hob and hood settings on your integrated appliance. Once you've finished cooking, the magnetic TwistPad® dial can simply be removed for a sleek, stylish cook top finish.

T59TS61N0
Flex Induction Hob (918mm width) **N 90**

3 Flex Induction zones

TwistPadFire®

THE JOY OF FLEXIBLE COOKING

DESIGN PERFORMANCE

Width (cm) | TwistPadFire® | Flex Induction | Frying Sensor

HOB TYPE		FLEXINDUCTION				
COLLECTION		N 90	N 90	N 90	N 90	N 90
MODEL NO.		T59TS61N0	T59TS5RN0	T68TS6RN0	T66TS6RN0	T50FS41X0
DESIGN						
Width	mm	918mm	918mm	826mm	606mm	903mm
Control position		Front	Front	Front	Front	Front
Control type		Twistpad Fire	Twistpad Fire	Twistpad Fire	Twistpad Fire	Twistpad Fire
Style		Premium Glass on Steel	Premium Glass on Steel	Premium Glass on Steel	Premium Glass on Steel	Front Bevel
KEY FEATURES						
Home Connect			●	●	●	
HobHood Control			●	●	●	
5" Full Touch colour display with Dish Categories						
Power Move		3 stages	3 stages	3 stages	3 stages	3 stages
Automatic setting transfer		●	●	●	●	●
Frying Sensor		5 settings	5 settings	5 settings	5 settings	5 settings
Power Boost		●	●	●	●	●
Pan Boost		●	●	●	●	●
Number of Flex Induction zones		3	2	2	2	2
Extended Flex Induction Zone				2	1	
Number of Combi Induction zones						
FEATURES						
Number of individual zones		5	5	4	4	4
Power levels		17	17	17	17	17
Digital display		●	●	●	●	●
Timer with automatic switch off for each zone		●	●	●	●	●
Count up Timer		●	●	●	●	●
QuickStart						
Energy Consumption Display		●	●	●	●	●
PERFORMANCE / TECHNICAL INFORMATION						
Nominal voltage	V	220240	220240	220240	220240	220240
Maximum power output	W	11,100	11,100	7,400	7,400	7,400
Electrical cable length	cm	110	110	110	110	110
GB plug						
Rear left FlexInduction zone power	kW/mm	2.20 200x240	2.20 200x240	2.20 200x230	2.20 200x240	2.20 200x240
Rear left zone power	kW/mm					
Rear right FlexInduction zone power	kW/mm	2.20 200x240	2.20 200x240	2.20 200x230	2.20 200x240	2.20 200x240
Rear right zone power	kW/mm					
Rear Centre zone power	kW/mm	3.30 300x240	3.30 300x240			
Front Centre zone power	kW/mm					
Front left FlexInduction zone power	kW/mm	2.20 200x240	2.20 200x240	2.20 200x230	2.20 200x240	2.20 200x240
Front left zone power	kW/mm					
Front right FlexInduction zone power	kW/mm	2.20 200x240	2.20 200x240	2.20 200x230	2.20 200x240	2.20 200x240
Front right zone power	kW/mm					
FlexInduction Zone left power	kW/mm	3.30 400x240	3.30 400x240	3.30 400x230	3.30 400x240	3.30 400x240
FlexInduction Zone right power	kW/mm	3.30 400x240	3.30 400x240	3.30 400x230	3.30 400x240	3.30 400x240
Extended FlexInduction rear left power	kW/mm			3.30 300x300		
Extended FlexInduction rear right power	kW/mm			3.30 300x300		
CombiZone left power	kW/mm					
CombiZone right power	kW/mm					
Rear left zone with powerBoost	(max. kW)	3.70	3.70	3.70	3.70	3.70
Rear right zone with powerBoost	(max. kW)	3.70	3.70	3.70	3.70	3.70
Rear Centre zone with powerBoost	(max. kW)	3.70	3.70			
Front Centre zone with powerBoost	(max. kW)					
Front left zone with powerBoost	(max. kW)	3.70	3.70	3.70	3.70	3.70
Front right zone with powerBoost	(max. kW)	3.70	3.70	3.70	3.70	3.70

All models comply with COMMISSION REGULATION (EC) No 1275/2008 with regard to ecodesign requirements for standby and off mode electric power consumption. 14.6kW power output (20A); Current management options for 16A, 13A or 10A connection. *MasterPartner® and AAR product only.

FLEX INDUCTION HOBS

Heat adjustment at your fingertips

Are you fond of exploring new and untried recipes and tastes? Our range of induction hobs lets you indulge each and every second of the cooking experience. Our FlexInduction hobs allow you to move your cookware freely around on the hob. The pots are automatically detected and heat applied where it's needed. But there's more to our hobs to guide you to a tasty result. Take the TwistPadFire® which puts heat at your fingertips. A simple rotating motion with your index finger allows you to set the temperature.

Discontinued September 2020.

Discontinued September 2020.

T59FT50X0
Flex Induction Hob (918mm width) **N 70**

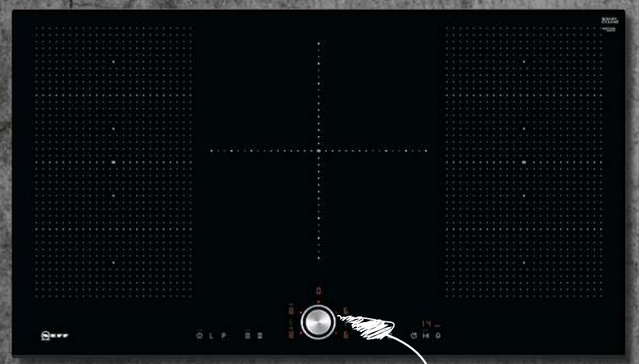

DESIGN PERFORMANCE

Width (cm) 90 | TwistPad® | Flex Induction | No. of Induction Zones 5

T58FT20X0
Flex Induction Hob (826mm width) **N 70**

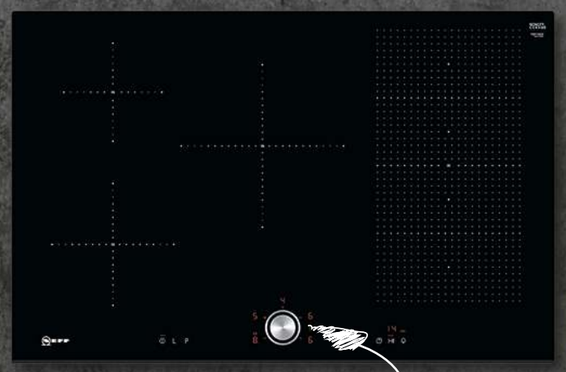

DESIGN PERFORMANCE

Width (cm) 80 | TwistPad® | Flex Induction | No. of Induction Zones 5

HOB TYPE		FLEXINDUCTION						
COLLECTION		N 70	N 70	N70	N70	N 70	N 70	N 70
MODEL NO.		T59FT50X0	T58FT20X0	T58TT20N0	T56TT60N0	T56FT60X0	T58FD20X0	T56FD50X0
DESIGN								
Width	mm	918mm	802mm	826mm	606mm	592mm	802mm	592mm
Control position		Front	Front	Front	Front	Front	Front	Front
Control type		Twistpad	Twistpad	Twistpad	Twistpad	Twistpad	Touch Control	Touch Control
Style		Front Bevel	Front Bevel	Premium Glass on Steel	Premium Glass on Steel	Front Bevel	Front Bevel	Front Bevel
KEY FEATURES								
Home Connect								
Hob-Hood Control								
5" Full Touch colour display with Dish Categories								
Power Move		3 stages	3 stages	3 stages	3 stages	3 stages	3 stages	3 stages
Automatic setting transfer								
Frying Sensor								
Power Boost		●	●	●	●	●	●	●
Pan Boost		●	●	●	●	●	●	●
Number of Flex Induction zones		2	1	1	2	2	1	1
Extended Flex Induction Zone				1				
Number of Combi Induction zones								
FEATURES								
Number of individual zones		5	5	5	4	4	5	4
Power levels		17	17	17	17	17	17	17
Digital display		●	●	●	●	●	●	●
Timer with automatic switch off for each zone		●	●	●	●	●	●	●
Count up Timer		●	●	●	●	●	●	●
QuickStart			●	●	●	●	●	●
Energy Consumption Display		●	●	●	●	●	●	●
PERFORMANCE / TECHNICAL INFORMATION								
Nominal voltage	V	220-240	220-240	220-240	220-240	220-240	220-240	220-240
Maximum power output	W	11,100	7,400	7,400	7,400	7,400	7,400	7,400
Electrical cable length	cm	110	110	110	110	110	110	110
GB plug								
Rear left FlexInduction zone - power	kW/mm	2.20 200x230			2.20 190x240	2.20 190x240		2.20 190x240
Rear left zone - power	kW/mm		1.40 145	1.40 145			1.40 145	
Rear right FlexInduction zone - power	kW/mm	2.20 200x230	2.20 200x210	2.20 200x210	2.20 190x240	2.20 190x240	2.20 200x210	
Rear right zone - power	kW/mm							1.40 145
Rear Centre zone - power	kW/mm	3.30 300x230	2.20 240	2.20 240			2.20 240	
Front Centre zone - power	kW/mm							
Front left FlexInduction zone - power	kW/mm	2.20 200x230			2.20 190x240	2.20 190x240		2.20 190x240
Front left zone - power	kW/mm		1.80 180	1.80 180			1.80 180	
Front right FlexInduction zone - power	kW/mm	2.20 200x230	2.20 200x210	2.20 200x210	2.20 190x240	2.20 190x240	2.20 200x210	
Front right zone - power	kW/mm							2.20 210
FlexInduction Zone left - power	kW/mm	3.30 400x230			3.30 380x240	3.30 380x240		3.30 380x240
FlexInduction Zone right - power	kW/mm	3.30 400x230	3.30 400x210	3.30 400x210	3.30 380x240	3.30 380x240	3.30 400x210	
Extended FlexInduction rear left - power	kW/mm							
Extended FlexInduction rear right - power	kW/mm							
CombiZone left - power	kW/mm							
CombiZone right - power	kW/mm							
Rear left zone - with powerBoost	(max. kW)	3.70	2.20	2.20	3.70	3.70	2.20	3.70
Rear right zone - with powerBoost	(max. kW)	3.70	3.70	3.70	3.70	3.70	3.70	2.20
Rear Centre zone - with powerBoost	(max. kW)	3.70	3.70	3.70			3.70	
Front Centre zone - with powerBoost	(max. kW)							
Front left zone - with powerBoost	(max. kW)	3.70	3.10	3.10	3.70	3.70	3.10	3.70
Front right zone - with powerBoost	(max. kW)	3.70	3.70	3.70	3.70	3.70	3.70	3.70

All models comply with COMMISSION REGULATION (EC) No 1275/2008 with regard to ecodesign requirements for standby and off mode electric power consumption.
14.6kW power output (20A); Current management options for 16A, 13A or 10A connection. *MasterPartner® and AAR product only.

INDUCTION & CERAMIC HOBS

Sleek, stylish & responsive - the perfect addition to a contemporary kitchen

Our induction hobs deliver heat exactly where you need it with little residual heat. This makes induction cooking one of the safest and most efficient modes of cooking around. Offering an extra-wide cooking surface and Full Touch Control operation, this hob is created with passionate, experimental cooks in mind.

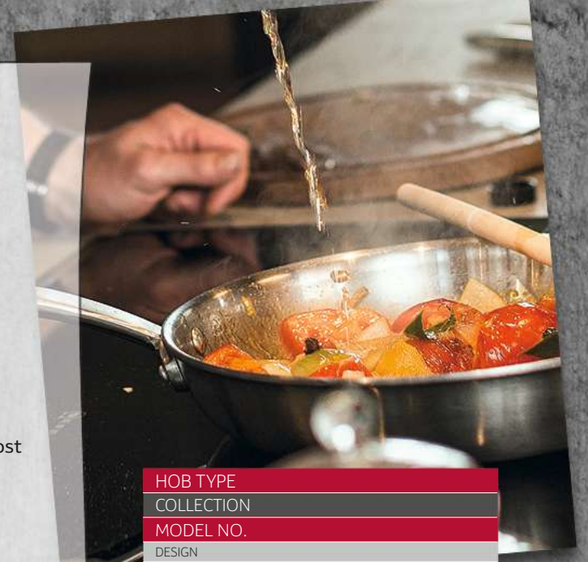

T48PD23X2
Induction Hob (792mm width) **N 50**

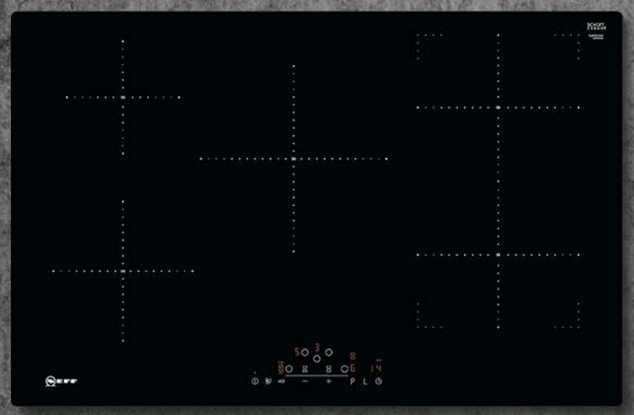

DESIGN PERFORMANCE

Width (cm) 90 | TwistPad® | Induction | No. of Induction Zones 4

FOR EVERY FORM OF PASSION

HOB TYPE	INDUCTION					
COLLECTION	N 50	N 50	N 50	N 50	N 30	N30
MODEL NO.	T48PD23X2	T46PD53X2	T48FD23X2	T46FD53X2	T36FB40X0	T36FB41X0G
DESIGN						
Width mm	793mm	572mm	802mm	592mm	592mm	592mm
Control position	Front	Front	Front	Front	Front	Front
Control type	Touch Control	Touch Control	Touch Control	Touch Control	Touch Control	Touch Control
Style	Flushline	Flushline	Front Bevel	Front Bevel	Front bevel	Frameless
KEY FEATURES						
HomeConnect						
Hob-Hood Control						
5" Full Touch colour display						
Power Move	2 stages	2 stages	2 stages	2 stages		
Automatic setting transfer						
Frying Sensor						
Power Boost	●	●	●	●	●	●
Pan Boost						
Number of flexInduction zones						
Extended flexInduction Zone						
Number of combiZones	1	1	1	1		
FEATURES						
Number of individual zones	5	4	5	4	4	4
Power levels	17	17	17	17	17	17
Digital display	●	●	●	●	●	●
Timer with automatic switch off for each zone	●	●	●	●	●	●
Count up Timer						
QuickStart	●	●	●	●	●	●
Energy Consumption Display	●	●	●	●		
PERFORMANCE / TECHNICAL INFORMATION						
Nominal voltage V	220-240	220-240	220-240	220-240	220-240	220-240
Maximum power output W	7,400	6,900	7,400	6,900	4,600	3,000
Electrical cable length cm	110	110	110	110	110	110
GB plug						●
Rear left FlexInduction zone - power kW/mm						
Rear left zone - power kW/mm	1.40 145	2.20 210x190	1.40 145	2.20 210x190	1.80 180	1.80 180
Rear right FlexInduction zone - power kW/mm			2.20 210x190			
Rear right zone - power kW/mm	2.20 210x190	1.40 145		1.40 145	1.40 145	1.40 145
Rear Centre zone - power kW/mm	2.20 240	2.20 240	2.20 240			
Front Centre zone - power kW/mm						
Front left FlexInduction zone - power kW/mm						
Front left zone - power kW/mm	1.80 180	2.20 210x190	1.80 180	2.20 210x190	1.80 180	1.80 180
Front right FlexInduction zone - power kW/mm						
Front right zone - power kW/mm	2.20 210x190	1.80 180	2.20 210x190	1.80 180	2.20 210	2.20 210
FlexInduction Zone left - power kW/mm						
FlexInduction Zone right - power kW/mm						
Extended FlexInduction rear left - power kW/mm						
Extended FlexInduction rear right - power kW/mm						
CombiZone left - power kW/mm		3.6 210x380				
CombiZone right - power kW/mm	3.6 210x380		3.6 210x380	3.6 210x380		
Rear left zone - with powerBoost (max. kW)	2.20	2.20	2.20	3.10	3.10	3.00
Rear right zone - with powerBoost (max. kW)	3.70	3.70	3.70	2.20	2.20	2.20
Rear Centre zone - with powerBoost (max. kW)	3.70	3.70	3.70			
Front Centre zone - with powerBoost (max. kW)						
Front left zone - with powerBoost (max. kW)	3.10	3.10	3.10	3.70	3.10	3.00
Front right zone - with powerBoost (max. kW)	3.70	3.70	3.70	3.70	3.70	3.00

All models comply with COMMISSION REGULATION (EC) No 1275/2008 with regard to ecodesign requirements for standby and off mode electric power consumption.
14.6kW power output (20A); Current management options for 16A, 13A or 10A connection. *MasterPartner® and AAR product only.

QUICK-LIGHT HOBS

Quick by name, quick by nature

With their frameless design, our Ceramic hobs stand out in any kitchen, and a whole range of options with up to 17 power settings makes preparing the next feast as easy as pie. And as cooking is all about creativity and individual taste, our enhanced touch control panel provides full flexibility over your cooking.

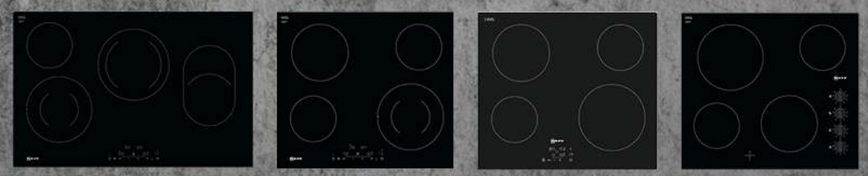

HOB TYPE		QUICKLIGHT HOBS							
COLLECTION		N 70		N 50		N 50		N 30	
MODEL NO.		T18FD36X0		T16FD56X0		T10B40X2		T16FK40X0	
COLOUR									
Width	mm	802mm		592mm		592mm		592mm	
Control position		Front		Front		Front		Side	
Control type		Touch control		Touch control		Touch control		Control dials	
Style		Bevelled front edge		Bevelled front edge		Bevelled front edge		Frameless	
FEATURES									
Number of individual zones		4		4		4		4	
No. of dual zones		2		1					
No. of extendable zones		1							
Power Boost		●		●					
Pan Boost		●		●					
Power levels		17		17		17		17	
Digital display		●		●		●		●	
Timer with automatic switch off for each zone		●		●		●		●	
Keep warm function		●		●					
Wipe protection function		●		●					
SAFETY FEATURES									
Main on/off switch		●		●		●		●	
Two-stage residual heat indicators		●		●		●		●	
Safety lock		●		●		●		●	
Timed safety switch off		●		●		●		●	
PERFORMANCE/TECHNICAL INFORMATION									
Nominal voltage	V	220-240		220-240		220-240		220-240	
Maximum power output	W	9,300		7,000		6,600		6,600	
Electrical cable length	cm	110		110		110		110	
GB plug									
Rear left zone	kW/mm	1.2	145	2.0	180	2	180	2.2	210
Rear right zone	kW/mm			1.2	145	1.2	145	1.2	145
Rear centre zone	kW/mm	1.7-2.4	230						
Front centre zone	kW/mm								
Front left zone	kW/mm	0.8-2.1	210	1.2	145	1.2	145	1.2	145
Front right zone	kW/mm	1.8-2.6	265	0.8-2.1	210	2.2	210	2	180
Rear left zone – with Power Boost	max. kW								
Rear right zone – with Power Boost	max. kW								
Rear centre zone – with Power Boost	max. kW	3.4							
Front centre zone – with Power Boost	max. kW								
Front left zone – with Power Boost	max. kW								
Front right zone – with Power Boost	max. kW	2.6		2.6					

All models comply with COMMISSION REGULATION (EC) No 1275/2008 with regard to ecodesign requirements for standby and off mode electric power consumption.
14.6kW power output (20A); Current management options for 16A, 13A or 10A connection. *MasterPartner® and AAR product only.

DOMINO HOBS

Mix and match your own unique hob

NEFF Domino hobs allow you to combine different cooking zones to create a hob which reflects how you like to cook. With the option to mix and match our gas, Flex Induction and Teppan Yaki Domino hobs, cooking variety is made possible without taking up too much of your work surface. Offering a contemporary Japanese-inspired mode of cooking, our Teppan Yaki Domino hob is designed for direct contact cooking. Ideal for fish, meat and vegetables, try combining with a gas or induction hob to create a truly creative hob.

Connecting Your Domino Hobs
It's simple to mix and match your Domino cooking zones using our connecting links accessory kit (Z9914X0). With a brushed steel design, our connecting kit creates a stylish and flexible hob effect.

Find out more about NEFF domino hobs at **neff-home .com/uk/**

COMPLETE FLEXIBILITY FOR TRULY CREATIVE COOKS

When only a custom design will do, our Domino hobs offer the ultimate bespoke solution.

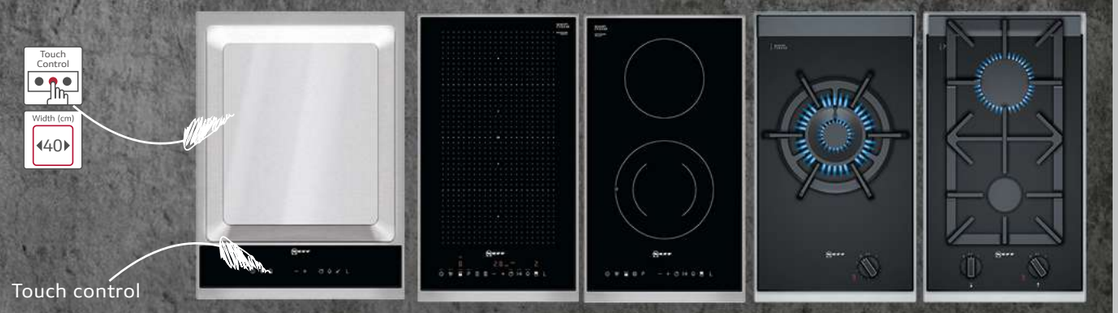

HOB TYPE		TEPPAN YAKI	FLEXINDUCTION	RADIANT CERAMIC QUICKLIGHT	GAS DOMINO	
COLLECTION		N 90	N 90	N 90	N 90	N 90
MODEL NO.		N74TD00N0	N53TD40N0	N13TD26N0	N23TA19N0	N23TA29N0
DESIGN						
Width	mm	396	306	306	306	306
Control position		Front	Front	Front	Front	Front
Control type		Touch control	Touch control	Touch control	Touch control	Touch control
Style		Ceramic glass / Stainless steel	Ceramic glass	Bevelled front edge	Ceramic glass	Ceramic glass
FEATURES						
FlameSelect®			1		●	●
FlexInduction zones			1			
Number of individual zones		2	2	2	1	2
No. of dual zones/dual circuit wok style burner				1	1	
No. of extendable zones		1	1			
Power Boost			●	●		
Pan Boost			●	●		
Power levels		17	17	17	9	9
Digital display		●	●		●	●
Timer with automatic switch off for each zone		●	●			
Keep warm function		●	●			
Wipe protection function			●			
Pre-set for natural gas					●	●
Safety cut-out facility					●	●
Low profile single piece burners					●	●
Cast iron pan supports					●	1
SAFETY FEATURES						
Main on/off switch		●	●	●	●	●
Two stage residual heat indicators		●	●	●	●	●
Safety lock		●	●	●		
Timed safety switch off		●	●	●		
PERFORMANCE/TECHNICAL INFORMATION						
Nominal voltage	V	220-240	220-240	220-240	220-240	220-240
Maximum power output	W	1,900	3,700	3,500	6,000	4,700
Electrical cable length	cm	100	110	100	100	100
GB plug						
Rear zone	kW/mm	0.95	2.2	1.2 145		2.80
Front zone	kW/mm		2.2	1.0 2.0 120/180		1.90
Centre/centre front burner power	kW				6.0	
Extended flexInduction	kW/mm		3.3			
Rear zone – with power Boost	max. kW		3.7			
Front zone – with power Boost	max. kW		3.7	2.3		
STANDARD ACCESSORIES						
Removable ceramic glass cover		●				
Teppan Yaki spatula		●				
Wok stand					●	
LPG jets					●	●
OPTIONAL ACCESSORIES						
Connecting links for installation with domino hob		Z9914X0	Z9914X0	Z9914X0	Z9914X0	Z9914X0
Set of four pans (3 x pans, 1 x sauté pan)			Z9442X0			
Rectagular roasting pan with lid (approx. 320x200mm)			Z9410X1			
Steamer pan insert of use with HEZ390011 roasting pan			Z9415X1			
Teppan Yaki (approx. 300x200mm)			Z9417X2			
Teppan Yaki (approx. 400x200mm)			Z9418X0			
Griddle plate (approx. 400x200mm)			Z9416X2			

All models comply with COMMISSION REGULATION (EC) No 1275/2008 with regard to ecodesign requirements for standby and off mode electric power consumption.
14.6kW power output (20A); Current management options for 16A, 13A or 10A connection. *MasterPartner® and AAR product only.

GAS HOBS

A true favourite amongst passionate cooks

Offering burner positioning which suits your cooking style, our gas hobs provide a robust and reliable solution for contemporary kitchens. Allowing you to physically see when more or less heat is directed to your cooking, gas remains a popular choice for passionate cooks with exacting standards. With sturdy cast iron pan supports for all of your favourite cookware, simply remove the supports once cool to easily clean the ceramic glass surface.

WHEN ONLY COOKING ON GAS WILL DO

T29TA79N0
Gas Hob (918mm width) **N 90**

SEARING, BOILING AND FLAMBÉING

DESIGN PERFORMANCE

Width (cm) 90 | FlameSelect® 1 9 | No. of Burners 5 | Wok Burner

COLLECTION		N 90	N 90	N 90	N 70	N 70	N 70
STAINLESS STEEL / STAINLESS STEEL TRIM		T29TA79N0	T27TA69N0	T26TA49N0			
BLACK / PREMIUM BLACK					T27CA59S0	T27CS59S0	T26CA42S0
WHITE / PREMIUM WHITE							
DESIGN							
Width	mm	918	750	606	752	752	590
Control position		Front	Front	Front	Front	Front	Front
KEY FEATURES							
FlameSelect		●	●	●	●	●	●
Digital power level display		●	●	●	●		●
Black control panel insert		●	●	●			
Number of dual circuit wok style burners		1	1		1	1	
High power (5.0kW+) wok burner		●					
Dual control wok burner		●					
Hob surface type		Ceramic glass	Ceramic glass	Ceramic glass	Tempered glass	Tempered glass	Tempered glass
FEATURES							
Number of cooking zones		5	5	4	5	5	4
Individual power levels		9	9	9	9	9	9
Variable power levels							
Ignition via control dials		●	●	●	●	●	●
Flame failure safety device		●	●	●	●	●	●
Cast iron pan supports (number)		3	2	2	5	5	4
Cast iron finish pan supports (number)							
Enamelled steel pan supports (number)							
Combine with other Top Trim models using Connecting link		●	●	●			
PERFORMANCE / TECHNICAL INFORMATION							
Nominal voltage	V	220-240	220-240	220-240	220-240	220-240	220-240
Maximum gas power output load	W	13,700	11,900	7,700	11,500	11,500	7,500
Total connected electrical load	max. W	2.0	2.0	2.0	2.0	2.0	2.0
Cable length	cm	150	100	100	100	100	100
GB plug							
Left burner power	kW	6.00					
Front left burner power	kW	1.10	1.90	1.10	1.00	1.00	1.75
Back left burner power	kW	1.90	1.90	1.90	1.75	1.75	1.75
Centre/Centre front burner power	kW		4.20		4.00	4.00	
Centre back burner power	kW						
Front right burner power	kW	1.90	1.10	1.90	1.75	1.75	1.00
Back right burner power	kW	2.80	2.80	2.80	3.00	3.00	3.00
Right burner power	kW						
Pre-set for natural gas		●	●	●	●	●	●
CE Marked		●	●	●	●	●	●
STANDARD ACCESSORY							
Wok stand		I	I				
LPG jets		28-30/37mbar	28-30/37mbar	28-30/37mbar	28-30/37mbar	28-30/37mbar	28-30/37mbar
OPTIONAL ACCESSORY							
Connecting link to combine with other		Z9914X0	Z9914X0	Z9914X0			

All models comply with COMMISSION REGULATION (EC) No 1275/2008 with regard to ecodesign requirements for standby and off mode electric power consumption.
14.6kW power output (20A); Current management options for 16A, 13A or 10A connection. *MasterPartner® and AAR product only.

GAS HOBS

Ingenious flames

For some cooks, there's nothing like preparing meals with flames. Our gas hob range provides you with the tool you need, no matter if you want stir-fry or slow-cook. Our 9-level FlameSelect® allows you to adjust the flame just like on an electric hob, making cooking even easier. With a range of sizes available, our hobs are ready for almost any kind of pot you can think of. Like Asian style? With our Dual Wok you have two flame rings stacked on top of each other – an ingenuous idea to adjust two flames for one delicious task.

T29DA69N0
Gas Hob (915mm width) **N 70**

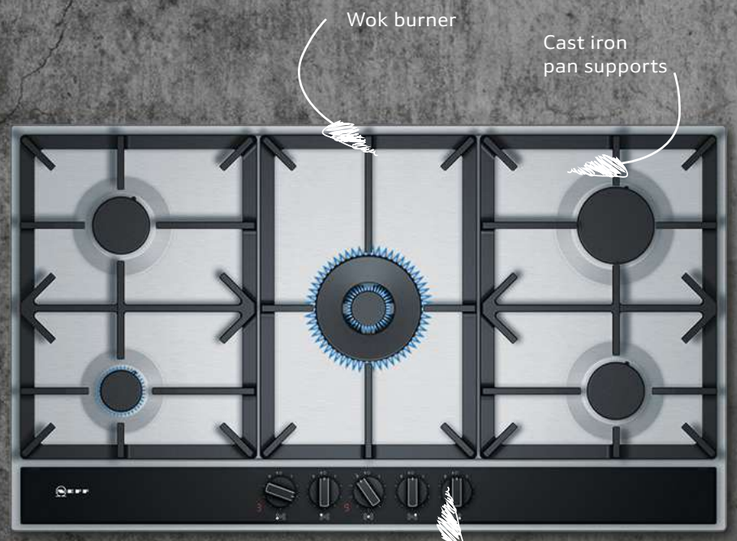

DESIGN PERFORMANCE

COLLECTION		N 70	N 70	N 70	N 70
STAINLESS STEEL / STAINLESS STEEL TRIM			T29DA69N0	T27DA69N0	T26DA59N0
BLACK / PREMIUM BLACK		T26CS49S0			
WHITE / PREMIUM WHITE					
DESIGN					
Width	mm	590	915	750	582
Control position		Front	Front	Front	Front
KEY FEATURES					
FlameSelect		●	●	●	●
Digital power level display			●	●	●
Black control panel insert			●	●	●
Number of dual circuit wok style burners			1	1	1
High power (5.0kW+) wok burner			●	●	●
Dual control wok burner			●	●	
Hob surface type		Tempered glass	Metal	Metal	Metal
FEATURES					
Number of cooking zones		4	5	5	4
Individual power levels		9	9	9	9
Variable power levels					
Ignition via control dials		●	●	●	●
Flame failure safety device		●	●	●	●
Cast iron pan supports (number)		4	3	3	2
Cast iron finish pan supports (number)					
Enamelled steel pan supports (number)					
Combine with other Top Trim models using Connecting link					
PERFORMANCE / TECHNICAL INFORMATION					
Nominal voltage	V	220-240	220-240	220-240	220-240
Maximum gas power output load	W	7,500	12,500	12,500	8,000
Total connected electrical load	max. W	2.0	2.0	2.0	2.0
Cable length	cm	100	150	100	100
GB plug					
Left burner power	kW				
Front left burner power	kW	1.75	1.00	1.00	1.75
Back left burner power	kW	1.75	1.90	1.75	1.90
Centre/Centre front burner power	kW			5.00	
Centre back burner power	kW				
Front right burner power	kW	1.00	1.75	1.75	1.00
Back right burner power	kW	3.00	3.00	3.00	3.50
Right burner power	kW				
Preset for natural gas		●	●	●	●
CE Marked		●	●	●	●
STANDARD ACCESSORY					
Wok stand			●	●	
LPG jets		28-30/37mbar	28-30/37mbar	28-30/37mbar	28-30/37mbar
OPTIONAL ACCESSORY					
Connecting link to combine with other			Z9914X0	Z9914X0	Z9914X0

All models comply with COMMISSION REGULATION (EC) No 1275/2008 with regard to ecodesign requirements for standby and off mode electric power consumption. 14.6kW power output (20A); Current management options for 16A, 13A or 10A connection. *MasterPartner® and AAR product only.

GAS HOBS

A true favourite amongst passionate cooks

Cooking with gas is a tried and tested medium. Its reliability, responsiveness and versatility have earned it the loyalty of both amateur and professional cooks alike. Our range of gas hobs all feature FlameSelect®, innovative technology that gives you more control options to select precise heat to suit whatever you are cooking.

GAS COOKING HAS NEVER BEEN MORE PRECISE

T27DS59N0 / T27DS59S0

Gas Hobs, available in Black glass or Stainless Steel (750mm width) **N 70**

T27DS59S0
Stainless Steal

Illuminated display for power levels

COLLECTION		N 70	N 70	N 70	N 70	N 70
STAINLESS STEEL / STAINLESS STEEL TRIM		T29DS69N0	T27DS79N0	T27DS59N0	T26DS59N0	T26DS49N0
BLACK / PREMIUM BLACK				T27DS59S0		T26DS49S0
WHITE / PREMIUM WHITE						
DESIGN						
Width	mm	915	750	750	582	582
Control position		Front	Front	Front	Front	Front
KEY FEATURES						
FlameSelect		●	●	●	●	●
Digital power level display						
Black control panel insert						
Number of dual circuit wok style burners		1	1	1	1	
High power (5.0kW+) wok burner		●	●			
Dual control wok burner		●	●			
Hob surface type		Metal	Metal	Metal	Metal	Metal
FEATURES						
Number of cooking zones		5	5	5	4	4
Individual power levels		9	9	9	9	9
Variable power levels						
Ignition via control dials		●	●	●	●	●
Flame failure safety device		●	●	●	●	●
Cast iron pan supports (number)		3	3	3	2	2
Cast iron finish pan supports (number)						
Enamelled steel pan supports (number)						
Combine with other Top Trim models using Connecting link						
PERFORMANCE / TECHNICAL INFORMATION						
Nominal voltage	V	220-240	220-240	220-240	220-240	220-240
Maximum gas power output load	W	12,500	12,500	11,500	8,000	7,500
Total connected electrical load	max. W	2.0	1.1	1.1	1.1	1.1
Cable length	cm	150	100	100	100	100
GB plug						
Left burner power	kW		5.00			
Front left burner power	kW	1.00		1.00	1.75	1.75
Back left burner power	kW	1.75		1.75	1.75	1.75
Centre/Centre front burner power	kW	5.00	1.00	4.00		
Centre back burner power	kW		1.75			
Front right burner power	kW	1.75	1.75	1.75	1.00	1.00
Back right burner power	kW	3.00	3.00	3.00	3.50	3.00
Right burner power	kW					
Pre-set for natural gas		●	●	●	●	●
CE Marked		●	●	●	●	●
STANDARD ACCESSORY						
Wok stand						
LPG jets		28-30/37mbar	28-30/37mbar	28-30/37mbar	28-30/37mbar	28-30/37mbar
OPTIONAL ACCESSORY						
Connecting link to combine with other						

DESIGN PERFORMANCE

All models comply with COMMISSION REGULATION (EC) No 1275/2008 with regard to ecodesign requirements for standby and off mode electric power consumption.
14.6kW power output (20A); Current management options for 16A, 13A or 10A connection. *MasterPartner® and AAR product only.

GAS HOBS

A true favourite amongst passionate cooks

Searing, boiling and flambéing on flames resonates with the primal cook in all of us. NEFF gas hobs combine the style and reliability that cooks expect from this powerful method of cooking. Browse the range to find a size and style which reflects your way of cooking.

COLLECTION		N50	N50
STAINLESS STEEL / STAINLESS STEEL TRIM		T27BB59N0	T26BB59N0
BLACK / PREMIUM BLACK			
WHITE / PREMIUM WHITE			
DESIGN			
Width	mm	750	582
Control position		Front	Front
KEY FEATURES			
Number of dual circuit wok style burners		1	1
High power (5.0kW+) wok burner		●	●
Dual control wok burner			
Hob surface type		Metal	Metal
FEATURES			
Number of cooking zones		5	4
Individual power levels			
Variable power levels		●	●
Ignition via control dials		●	●
Flame failure safety device		●	●
Cast iron pan supports (number)		2	2
Cast iron finish pan supports (number)			
PERFORMANCE / TECHNICAL INFORMATION			
Nominal voltage	V	220-240	220-240
Maximum gas power output load	W	11,400	7,800
Total connected electrical load	max. W	2.0	1.1
Cable length	cm	100	100
GB plug			
Front left burner power	kW	1.00	1.75
Back left burner power	kW	3.3	1.75
Centre/Centre front burner power	kW	4.00	
Centre back burner power	kW		
Front right burner power	kW	1.70	1.00
Back right burner power	kW	3.00	3.30
Pre-set for natural gas		●	●
CE Marked		●	●
STANDARD ACCESSORY			
LPG jets		28-30/37mbar	28-30/37mbar

COLLECTION		N 30	N 30
STAINLESS STEEL / STAINLESS STEEL TRIM			T26BR46N0
BLACK / PREMIUM BLACK		T26CB49S0	T26BR46S0
WHITE / PREMIUM WHITE			T26BR46W0
DESIGN			
Width	mm	590	580
Control position		Front	Right Side
KEY FEATURES			
Number of dual circuit wok style burners			
High power (5.0kW+) wok burner			
Dual control wok burner			
Hob surface type		Tempered glass	Metal
FEATURES			
Number of cooking zones		4	4
Individual power levels			
Variable power levels		●	●
Ignition via control dials		●	●
Flame failure safety device		●	●
Cast iron pan supports (number)		2	
Cast iron finish pan supports (number)			2
PERFORMANCE / TECHNICAL INFORMATION			
Nominal voltage	V	220-240	220-240
Maximum gas power output load	W	7,500	7,400
Total connected electrical load	max. W	1.1	0.8
Cable length	cm	100	100
GB plug			
Front left burner power	kW	1.75	3.00
Back left burner power	kW	1.75	1.70
Centre/Centre front burner power	kW		
Front right burner power	kW	1.00	1.00
Back right burner power	kW	3.00	1.70
Right burner power	kW		
Pre-set for natural gas		●	●
CE Marked		●	●
STANDARD ACCESSORY			
LPG jets		28-30/37mbar	28-30/37mbar

All models comply with COMMISSION REGULATION (EC) No 1275/2008 with regard to ecodesign requirements for standby and off mode electric power consumption.
14.6kW power output (20A); Current management options for 16A, 13A or 10A connection. *MasterPartner® and AAR product only.

COOKER HOODS

Create a fresh atmosphere

NEFF hoods are designed to cater for every Cookaholic's kitchen. Efficient, quiet and equipped with features such as built-in ambient lighting, the design and placement of your hood can be as flexible, and stylish, as your living space.

THE COLLECTION

The finishing touch to the perfect kitchen

At NEFF, we understand that selecting the right hood to complement your kitchen and cooking style can sometimes be challenging. To help you select the right cooker hood for you, we've categorised all our models into easy-to-follow Collections based on product features, control display and design.

N 90

STYLES OF HOODS

- Downdraft
- Ceiling
- Island
- Angled
- Creative Slim
- Box Chimney
- Telescopic
- Canopy

FEATURES

THIS COLLECTION CAN INCLUDE*:-

- Touch Control with display
- Premium design coordination
- LED lights
- Fully automatic hood with Hob Hood Control
- Climate Control Sensor
- Ambient Light
- Efficient Drive Motor for quiet operation
- Dishwasher proof metal grease filters
- Regenerative Clean Air recirculation filters for certain models available

N 70

STYLES OF HOODS

- Ceiling
- Flat Slimline
- Telescopic
- Canopy

FEATURES

THIS COLLECTION CAN INCLUDE*:-

- Touch Control or Soft Touch buttons with display
- Premium design coordination
- LED lights
- Ambient Light
- Efficient Drive Motor for quiet operation
- Dishwasher-proof metal grease filters
- Regenerative Clean Air recirculation filters for certain models available

N 50

STYLES OF HOODS

- Island
- Angled
- Glass Chimney
- Box Chimney
- Slim Pyramid
- Telescopic
- Canopy
- Ceiling

FEATURES

THIS COLLECTION CAN INCLUDE*:-

- Touch Control or Soft Touch buttons
- High quality design coordination
- LED lights
- Dishwasher-proof metal grease filters
- Regenerative Clean Air recirculation filters for certain models available

N 30

STYLES OF HOODS

- Glass Chimney
- Box Chimney
- Slim Pyramid
- Pyramid
- Telescopic
- Canopy
- Integrated

FEATURES

THIS COLLECTION CAN INCLUDE*:-

- Push Button or Rocker Switch controls
- High quality design
- LED or Halogen lights
- Dishwasher-proof metal grease filters
- Regenerative Clean Air recirculation filters for certain models available

*The features included in each collection are an overview only. Please ensure that you check the product detail for exact features of each model.

A HOOD FOR EVERY COOKAHOLIC

Keep your kitchen under control

It's amazing when a steak is sizzling in your pan, and the smell is part of an exciting cooking experience. But there are some kitchen odours nobody is too fond of. Introducing our collection of quiet but powerful extractor hoods. Choose from our four installation locations to showcase your stylish hood within your kitchen; Ceiling Installation, Wall Installation, Integrated Furniture Installation and Worktop Installation.

CEILING INSTALLATION

Offering both seamless integrated ceiling hoods and stylish island hoods, we've got a ceiling installation to suit any Cookaholic. Sleek, flush and unobtrusive, our ceiling mounted hoods effectively extract steam and odours without taking up valuable kitchen space. Easy to use with a remote control, the grease filters can also simply be removed and cleaned in the dishwasher. Our ceiling hoods feature a high extraction rate whether ducted out or recirculated. For recirculation installation, air is drawn in through a series of grease and charcoal filters and then recirculated back into the room without the need to duct out. The new recirculation Plug&Play ceiling hood is easy to install with new CleanAir Plus Anti-Pollen filters included.

Alternatively, if you want to make a style statement within your kitchen, our island hoods are a stunning way to showcase a central cooking and preparation space. Available with modern flat glass and box designs, the range is designed to complement our gas, ceramic and induction hobs. With height adjustable chimney sections, there are options to suit all ceiling heights too.

Featured model: Plug&Play ceiling hood I14RBQ8W0

WORKTOP INSTALLATION

If you're looking for powerful ventilation without disturbing anyone while preparing meals, our Downdraft Hoods are a great choice. Devised for kitchen islands, they coordinate beautifully with our induction hobs. The Downdraft Hood is simply built into your worktop or kitchen furniture. Rising at the touch of a button, it gets to work quietly and effectively. You can choose between 3 power levels and 2 intensive levels, using TouchControl. Once activated, the hood can even act as an automatic air freshener: it runs five minutes every hour to keep your kitchen atmosphere nice and fresh – a clever idea for parties.

INTEGRATED FURNITURE INSTALLATION

When cooking up a meal for friends and family the last thing you want is the noise of a hood in the background. Our integrated furniture hoods are built to operate on low noise levels while maintaining high air quality in your kitchen. Choose between telescopic and integrated hoods to find the hood that fits your kitchen, and cooking style, best.

TELESCOPIC HOOD
For a smaller kitchen where space is at a premium, these clever hoods pull out from underneath a cabinet when required.

INTEGRATED HOOD
These hoods look like they're part of the furniture. Hidden behind a unit door, they simply pull out when needed.

CANOPY HOOD
Designed to fit neatly under an overhead unit, Canopy Hoods are discreet and save valuable kitchen space.

WALL INSTALLATION

Hoods installed on the wall can be used to create a design feature in themselves, adding a focal point to your kitchen while offering powerful extraction for all types of cooking. Choose from a range of styles to suit your kitchen design, including the trendy Creative Slim hoods or Angled Glass hoods with features such as Ambient Light that let you express yourself with colour, as well as your cooking. And if choosing to install in recirculation, the hood can be fitted without a chimney piece for a sleeker finish to your hood installation.

ANGLED GLASS
Our black glass chimney hoods perfectly coordinate with our ovens and the NEFF Induction hob range.

FLAT SLIMLINE
Our black Flat Slimline Chimney Hoods create a sleek finish to your kitchen and coordinate with the NEFF Induction hob range.

GLASS CHIMNEY
Stylish stainless steel design and clear glass canopy in either a flat or curved design.

BOX CHIMNEY
The focal point of any kitchen, our chimney hoods are modern and eye-catching. With a vast range of designs, each provides the ideal mix of style and performance.

CREATIVE SLIM
Use it as a writable surface to jot down flashes of inspiration, attach shopping lists to the magnet board, or use the shelf for your recipes. Or just use as a powerful, yet quiet hood.

PYRAMID CHIMNEY
Ideal when you're trying to achieve the look of a modern kitchen, our stainless steel Pyramid Hoods are stylish and striking.

HOODS FEATURES & FUNCTIONS

Because every cook has their own unique cooking style

Looking for powerful extraction without distraction? Our advanced range of hoods have been designed for those who long for a premium look in the kitchen. Proud of its continuous innovations in cooker hoods, NEFF has a range of features and functions to suit every cooking style.

READY FOR A NEW KITCHEN?

Get inspiration, advice and more on the NEFF Inspiration Hub. You'll find articles by professional designers, installation advice and galleries of real NEFF kitchens to help you create a room that's right for you.

Visit **neff-home.com/uk/discover/inspiration-hub** to see how other people and professional designers are creating their NEFF kitchens?

KEY FEATURES

HOME CONNECT – Control all functions and settings of your hood directly from your smart phone and voice control for the ultimate connected cooking experience.

HOB HOOD CONTROL – Being able to control the hood directly from the hob means the hood turns on when you start cooking and, in automatic mode, can automatically regulate the power level for the best performance with the lowest noise – it also means you no longer need to worry about adjusting the hood and you can focus on your cooking.

CLIMATE CONTROL – Detects the amount of steam and smells using a sensor attached to the motor and automatically sets the most effective power level to extract it.

AMBIENT LIGHT – Illuminates your kitchen in the light that suits the occasion best. Choose from 31 colours to change how your kitchen looks and, most importantly, how it makes you feel.

EFFICIENT DRIVE MOTOR – Save energy and enjoy a noise free, illuminated kitchen environment thanks to our ultra-efficient high-speed extractor hood fan, with Efficient Drive motor technology and LED lights.

NEFF SILENCE BUTTON – The unique noise reduction function reduces the fan noise by a couple of decibels, ensuring that the kitchen stays quiet while you cook and entertain your guests. This function can be used at any fan setting except fan setting 1.

SATURATION INDICATORS – Take the stress out of guessing, this function will prompt you if the grease filters should be cleaned. If the hood is installed in recirculation, this will also indicate when the charcoal filters need replacing.

BOOST POSITION For our sleek angled glass and flat hoods, receive an extra boost of extraction performance in special cooking situations, for example when frying meat or fish. The front panel can be slightly opened during cooking to a defined extraction boost position in order to increase the steam catching rate of the hood and keep your kitchen free from steam.

FEATURES & FUNCTIONS

AUTOMATIC AFTER-RUNNING
Continues running at a low speed for 3 -30 minutes before turning itself off. Perfect for keeping fresh air in the kitchen post cooking.

NEFF FRESH AIR
Runs an automatic air exchange programme, turning the hood onto power level one for five minutes every hour for as long as required.

INTENSIVE SETTING
Boosts the extraction rate to the maximum level to cope with particularly demanding cooking conditions.

AUTOMATIC REVERT
Automatically reverts the hood back to a lower power level after approximately ten minutes of being on the intensive setting.

ELECTRONIC POWER LEVEL DISPLAY
The sleek display clearly shows the selected fan power level setting.

SOFT LIGHT
Brightens or dims the lights as it's switched on or off; just press and hold to adjust the level of brightness.

KEEP YOUR KITCHEN UNDER CONTROL

REMOTE CONTROL
Available across all Ceiling Hood models within the N90, N70 and N50 Collections, you can now control your hood via Remote Control

TOUCH CONTROL
Featured on selected models in the N90, N70 and N50 Collections, Touch Control flawlessly complements our ovens and compact appliances. An LED display is also available with selected Touch Control models.

SOFT TOUCH CONTROL
Available across selected models within the N70 and N50 Collection, our Soft Touch Control hoods allow for greater control over power levels. Selected models also feature a white LCD screen.

PUSH BUTTON
Our classic hoods feature simple, sleek and easy to use push button controls. Available across selected models in the N30 Collection.

ROCKER OR SLIDER SWITCH CONTROL
Available on our N30 Telescopic and Canopy models, our rocker or slider switch control offers a simple and straight forward setting navigation that's neatly concealed within the hood furniture.

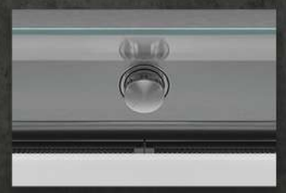

ROTARY SWITCH CONTROL
Featured on selected Canopy Hood models within our N70 Collection, our Rotary Switch Control features a pop-out dial with 3 levels of power to choose from. When not in use the dial can be neatly popped back into place.

HOB HOOD CONTROL

Fresh air right when you need it

Gone are the days that you need to worry about setting your hood to the relevant setting. When you start cooking on the hob, our hoods will automatically switch on, light up and adapt an extraction level suited to the amount of steam and odours detected. Available across selected models within our Ceiling and Wall Installation ranges, Hob Hood Control allows you to focus purely on the cooking and keep messy hands where they should be.

Hob Hood Control available with our stylish ceiling hoods

Hob Hood Control available with our sleek, modern Angled Hood with Ambient Lighting

Hob Hood Control available with our statement Box Island Hood

Hob Hood Control available with our wall installation Box Chimney Hood

CLIMATE CONTROL SENSOR

A FULLY AUTOMATED HOOD

Also available across selected premium hood models is our clever Climate Control Sensor feature. Benefits you can expect with a Climate Control Sensor hood are:

- Turn on the hob and the hood comes to life, including the lights
- The hood is completely automatic, so you can enjoy worry-free cooking
- The sensor constantly monitors cooking smells and steam
- The fan speed will automatically adjust to what you're cooking
- The hood will turn itself off when no steam or smells are detected

Choose a hood with Climate Control Sensor for maximum performance and minimum energy consumption.

CEILING HOODS

The seamless, premium space-saving kitchen solution

If cooking is your passion our integrated ceiling hoods make sure it stays that way. Quietly extracting unwanted odours and steam, they are built into the ceiling to save valuable kitchen space and don't obscure your magic. Sleek and simple to install, our ceiling hoods are suitable for ducting out or recirculating the air (with a separate recirculating module accessory). And thanks to the Efficient Drive motor, these hoods offer powerful performance for every type of kitchen with effective illumination for your island area.

MODELS AVAILABLE IN STANDARD 90CM OR WIDE 120CM

REMOTE CONTROL INCLUDED WITH ALL CEILING HOOD MODELS

CleanAir filter stainless steel: Z52JCC0N0

CleanAir filter white: Z52JCC0W0

Regenerative filter stainless steel: Z52JCD0N0

Regenerative filter white: Z52JCD0W0

KEY FEATURES

- **Control your hood with both your smart device and voice command with Home Connect.**
- **Make your hob and hood work in harmony with Hob Hood Control, perfect for keeping your hands free, and focus, on the cooking.**
- **Achieve high extraction rates with quiet noise levels thanks to our Efficient Drive motor.**
- **LED white light temperature control**
- **Comes with a remote control for easy setting navigation**
- **Recirculation is also possible with a separate recirculation module. This includes either a CleanAir filter or a Regenerative Filter which is longer lasting for 10 years – simply regenerate in the oven every 4 months.**

LIGHTING

Warm and welcoming lighting – the true mark of a kitchen

Illuminate your kitchen in the light that suits the occasion best with our new ambient light feature. With many of our extractor hoods incorporating energy-efficient LED lighting, creating a warm, inviting space is always part and parcel of a NEFF kitchen. With a welcoming ambience and quiet extraction, our hoods are designed with sociable kitchens in mind. With the power to ventilate even the most spacious open-plan living areas, odours and steam are effectively eliminated without extraction noise drowning out the conversation.

THE LIGHT CREATED BY A NEFF EXTRACTOR HOOD WILL COMPLEMENT THE WHOLE KITCHEN LIGHTING SCHEME.

AMBIENT LIGHT

Illuminates your kitchen in the light that suits the occasion best. Choose from up to 31 colours to change how your kitchen looks and, most importantly, how it makes you feel.

LED

LED lighting not only provides bright, enduring illumination for your kitchen, but is also extremely energy efficient, consuming up to 85% less energy than an equivalent five year old model with halogen lights. Our LED lighting lasts for up to 40,000 hours.

HALOGEN SPOTLIGHTS

Halogen lights are small, tidy and provide crisp colour and good illumination. Halogen bulbs are also long-lasting.

ADJUSTABLE LED WHITE COLOUR TEMPERATURE

Perfect for setting the mood or matching to other kitchen lighting. Using the Home Connect App with selected models, you can adjust the white colour temperature between 2,700K – 5,000K.

HOME CONNECT HOODS

Innovation is here, and it's delicious

Keep your eyes on your cooking, not the hood controls with our Wi-Fi connected hoods in the N90 and N70 collections. Make adjustments to ventilation speed and lighting from the Home Connect app, via voice command or via the hob with Hob Hood Control. Alternatively, let our fully automatic hood adjust to vapours and aromas without you lifting a finger. Once connected, you can also choose to receive notifications about when your grease filters need cleaning or recirculation filters need replacing.

HOME CONNECT IS COMPATIBLE WITH AMAZON ALEXA AND GOOGLE ASSISTANT

Home Connect

QUIET HOODS

That won't drown out the conversation

Most of our hoods are exceptionally quiet thanks to our brushless Efficient Drive motor. However, noise is also determined by the length and type of ducting used and the installation surroundings. To provide a more meaningful measure of noise specific to the appliance, we state Sound Power in dB(A) re 1pW. With this system, there are strict guidelines for measuring the noise level, enabling you to easily compare our range and to give a closer indication of likely noise levels once the hood is installed.

Source: public sector information published by the Health and Safety Executive and licensed under the Open Government Licence see www.hse.gov.uk/noise/advice.htm

HOW THE NEFF D96IKW1S0B CHIMNEY HOOD COMPARES*...

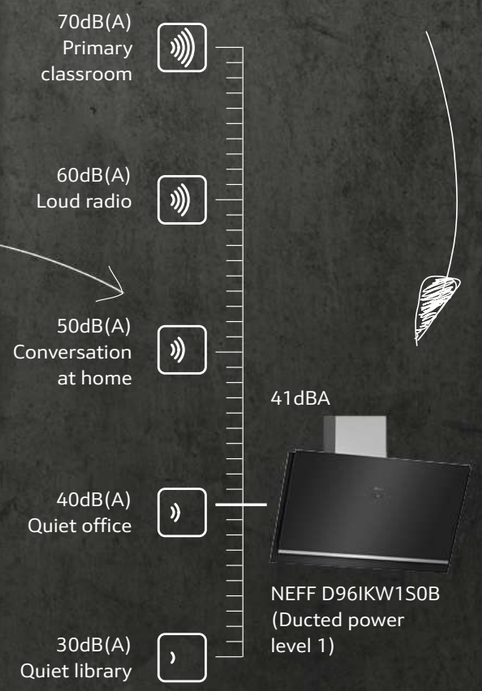

EXTRACTION OR RECIRCULATION?

The best way to remove steam and odours is to extract the air out of the room through ducting. Unfortunately, in apartments or where the hood is too far away from an outside wall, this may not be possible. In this case, the only alternative is to recirculate the air. Stale air is sucked through a grease filter, before being purified in a charcoal filter, and then pumped back into the kitchen via an opening in the hood.

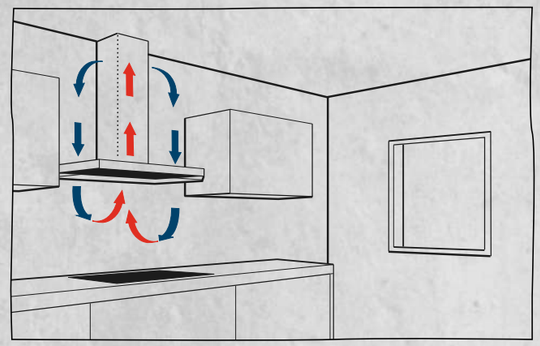

Recirculation

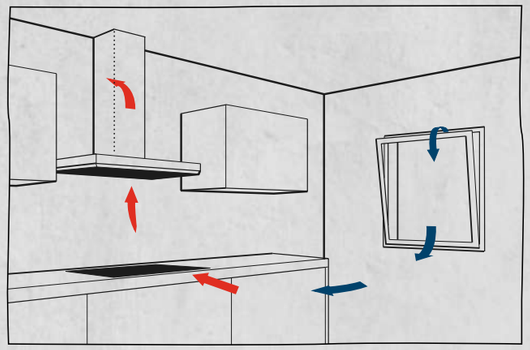

Extraction

Recirculating
Removes between 70-95% of odours depending on filter used. Requires changing of charcoal filter on a regular basis or a longer-lasting Regenerative filter for certain models can be used.

Ducted
Removes up to 98% of odours in an optimal installation. Requires planning of ducting (ducting to be sourced separately), however doesn't require a recirculation charcoal filter.

USE THE FOLLOWING EQUATION TO CALCULATE YOUR EXTRACTION RATE:

Volume of kitchen (length x width x height) eg. 4m x 3m x 2.5m = 30m³

6 x volume in normal operation and 12 x volume in intensive operation.

Please note that these are recommended estimates only to be used as a guide. This assumes a 2.5m standard ceiling height with 12 air changes per hour to match to an intensive extraction rate.

IDENTIFY YOUR EXTRACTION RATE

Your extractor needs to circulate the air in the room 6 times in normal operation, 12 times in intensive operation, per hour. Use the below to help identify the required extraction rate which can then be used to select the appropriate extractor.

	2.5m	3m	3.5m	4m	4.5m	5m
2.5m	16m³					
3m	19m³	23m³				
3.5m	22m³	26m³	31m³			
4m	25m³	30m³	35m³	40m³		
4.5m	28m³	34m³	39m³	45m³	51m³	
5m	31m³	38m³	44m³	50m³	56m³	63m³

REGENERATIVE RECIRCULATION FILTERS

The new Regenerative Charcoal Filters give you a long lasting filter, thanks to a regenerative process using your oven, and can even be installed without a chimney piece if preferred. Benefit from up to 95% odour reduction when in recirculation mode.

RECIRCULATION FILTERS

We offer a range of recirculation filters that are available depending on the model of hood you choose. Featuring powerful odour reduction rates and performance benefits, our new regenerative filters can last up to 10 years and are regenerated through a heating process in the oven every 4 months.

TYPE :	STANDARD CHARCOAL FILTER	CLEANAIR PLUS FILTER	REGENERATIVE CLEANAIR FILTER
		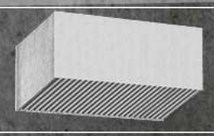	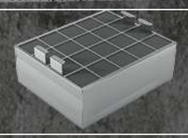
ODOUR REDUCTION	Up to 85%	Up to 95%	Up to 95% (Up to 86% if installed without a chimney)
RECOMMENDED EXCHANGE	Approx. 2 times per year	Approx. once per year	Approx. once every 10 years
KEY BENEFITS	• Simple installation • Anti-fish treatment	• Up to 3dB (A) sound reduction • Better extraction performance • Anti-fish treatment • Removes over 99% of all pollen	• Up to 3dB (A) sound reduction • Regenerated in the oven every 4 months recommended (2 hours 200°C) • Better extraction performance
INSTALLATION	Behind grease filter, inside the hood	Extra module attached to hood chimney (stainless steel) New Chimney Hoods: Integrated plastic module fitted inside the chimney piece	Extra module (as per CleanAir filter) onto chimney or inside chimney. 'Chimless' installation possible (Angled and Flat only)
INSTALLATION WITHOUT CHIMNEY POSSIBLE?	Yes (Angled and Flat only)	No – module must fit onto chimney or inside the chimney	Yes (Angled and Flat only)

CleanAir Plus and Regenerative filters not available for all styles of hood. Additional module may be required to house the filter. Images for example only, different filters may come in a different size and style.

INSTALLATION

The following points should be observed for optimum ducted extraction results and low noise:

1. Ensure any pipe elbow bends are at least 30cm from the hood ducting opening.
2. Avoid reducing the diameter or area of the ducting.
3. Use wide-angled pipe elbows, but keep the number used to a minimum.
4. Only install pipes with smooth, even inner surfaces. If a flexible hose has to be used, ensure it is pulled tight to smooth out the ridges before fixing.
5. Use ducting pipes with a diameter of at least 120mm, but ideally 150mm.
6. Keep piping to a minimum – use the most direct route to an external outlet.
7. Make sure that there is an adequate supply of fresh air to replace the air ducting out of the kitchen, i.e. windows that can be opened, doors to adjacent rooms, air bricks. Problems with installation may occur if points 1-7 are not observed.

EASY MOUNTING SYSTEM

Thanks to an easy wall-mounting system, selected hoods can be installed quickly and securely by one person. Rotating offset 'cam' fixings make it possible for positional adjustments of up to 6mm, helping to get the hood level and stable. (Not available on all our hoods.)

WORKTOP INSTALLATION

Mix and match your perfect hob

NEFF worktop ventilation solutions mean that the hood is installed behind the hob, meaning they are effective at extracting kitchen smells and steam right where you are cooking. Their ease of installation and extracted or recirculation options mean that they can also be placed flexibly throughout your kitchen, integrating into your work surface for a sleek look throughout your kitchen.

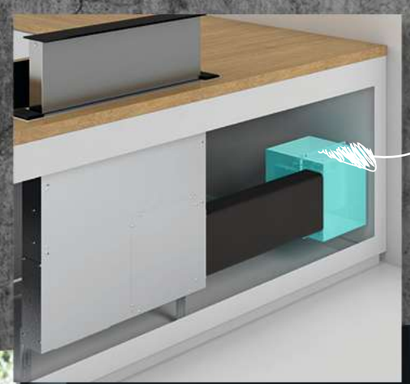

The NEFF Remote Motor Installation Mounting Kit (Z92IDM9X0) frees up space under the worktop and provides the option to mount the motor up to 3 metres away from the appliance.

Image for illustrative purposes only. Ducting not supplied.

COOKING FLEXIBILITY KNOWS NO LIMITS

The new downdraft hood faultlessly integrates into the kitchen design without any compromise, thanks to its space-saving, quiet, yet powerful, Inline motor installation option. The hood is complementary to our oven and hob matching design for an idyllic combination of performance and sophistication.

HOOD TYPE		DOWNDRAFT
MODEL		D95DAP8N0B
COLLECTION		N 90
Colour		Stainless Steel & Black Glass
SPECIAL FEATURES		
Home Connect		
Adjustable LED white colour temperature		
Ambient light		
Climate control sensor		
Hob Hood control		
Efficient Drive		
Intensive setting / Automatic intensive revert [1]		● / ●
Boost position (Angled & Flat Hoods)		
NEFF Silence function		
Filter saturation indicator		●
FEATURES		
Suitable for ducted operation / recirculating		● / ●
Electronic power level display		
Power levels		3 + 2 Intensive
NEFF Fresh Air (Interval operation)		
Automatic after running	minutes	10
Lighting		LED 7W strip
Softlight with dimmer function		
Number of metal grease filter cassettes		2
Type of control		Touch Control
OPTIONAL ACCESSORIES[2]		
Long life recirculation kit (2 year regenerative)		Z92IDP9X0
Remote motor installation mounting kit		Z92IDM9X0
PERFORMANCE / TECHNICAL INFORMATION		
Appliance width	mm	918
Extraction Rate in m³/h [3,4]		
Power level 1 - ducted / recirculating		260 / 230
Power level 2 - ducted / recirculating		428 / 410
Power level 3 - ducted / recirculating		530 / 452
Intensive level 1 - ducted / recirculating		630 / 482
Intensive level 2 - ducted / recirculating		750 / 500
Noise level (sound power) based on dB(A) re 1 pW [3,5]		
Power level 1 - ducted / recirculating		43 / 37
Power level 2 - ducted / recirculating		58 / 70
Power level 3 - ducted / recirculating		62 / 72
Intensive level 1 - ducted / recirculating		66 / 74
Intensive level 2 - ducted / recirculating		67 / 75
Pipe outlet diameter	mm	150
Minimum distance above an electric hob / gas hob[6]	mm	
GB plug		●
Energy Rating		A

[1]Power automatically reverts back to normal setting after intensive. [2]A type of recirculating kit is required if recirculating. [3]Air Flow and noise declarations made in line with CECED Code of Conduct. [4]Measured according to EN61591 on largest pipe diameter. [5]Sound power measured according to EN60704-3 on largest pipe diameter. [6]From top of pan supports. Depending on the model, a 'Recirculating odour filter kit' will consist of the following items: Charcoal filter, flexible hose, air duct, fixing components, installation instructions.

CEILING INSTALLATION HOODS

The ideal space saving solution

Sleek, stylish and unobtrusive, our ceiling mounted hoods effectively extract steam and odours without taking up valuable kitchen space. Easy to use with a remote control, the grease filters can also simply be removed and cleaned in the dishwasher. Our Plug&Play recirculation only ceiling hoods are designed to complement the layout of your space and offer complete flexibility when designing your kitchen. With a high extraction rate, air is drawn in through a series of grease and charcoal filters and then recirculated back into the room without the need for ducting.

VISIT NEFF-HOME.COM/UK/ FOR MORE INFORMATION ON OUR CEILING HOODS

I25CBS8W0B

I94CAQ6N0B

I95CAQ6W0B

I14RBQ8W0

I97CPS8W5B

I95CBS8W0B

I95CAQ6N0B

I95CAP6N1B

I97CPS8W5B

Flush with the ceiling, integrated ceiling hood (900mm width) **N 90**

Installation view

DESIGN PERFORMANCE

HOOD TYPE		CEILING	CEILING	CEILING	CEILING FLAT MOTOR	CEILING	CEILING	CEILING COMPACT MOTOR	CEILING PLUG & PLAY
MODEL		I97CPS8W5B	I25CBS8W0B	I95CBS8W0B	I94CAQ6N0B	I95CAQ6N0B	I95CAQ6W0B	I95CAP6N1B	I14RBQ8W0
COLLECTION		N 90	N 70	N 70	N 50	N 50	N 50	N 50	N 70
Colour		White & White Glass	White & White Glass	White & White Glass	Stainless Steel	Stainless Steel	White	Stainless Steel	White & White Glass
SPECIAL FEATURES									
Home Connect		●	●	●	●	●	●		●
Adjustable LED white colour temperature		●							
Ambient light									
Climate control sensor		●	●	●					
Hob Hood control		●	●	●	●	●	●		●
Reduced size motor					Flat			Compact	
Efficient Drive		●	●	●	●	●	●	●	●
Intensive setting / Automatic intensive revert[1]		● / ●	● / ●	● / ●	● / ●	● / ●	● / ●	● / ●	● / ●
Boost position (Angled & Flat Hoods)									
NEFF Silence function		●	●	●	●	●	●		●
Filter saturation indicator		●	●	●	●	●	●	●	●
FEATURES									
Suitable for ducted operation / recirculating		● / ●	● / ●	● / ●	● / ●	● / ●	● / ●	● / ●	/ ●
Electronic power level display									
Power levels		3 + 2 Intensive	3 + 2 Intensive	3 + 2 Intensive	3 + 2 Intensive	3 + 2 Intensive	3 + 2 Intensive	3 + 1 Intensive	3 + 2 Intensive
NEFF Fresh Air (Interval operation)		●	●	●	●	●	●	●	●
Automatic after running	minutes	10	10	10	10	10	10	10	10
Lighting		4 x LED lights	4 x LED lights	4 x LED lights	4 x LED lights	4 x LED lights	4 x LED lights	4 x LED lights	4 x LED strips
Softlight with dimmer function		●	●	●	●	●	●	●	●
Number of metal grease filter cassettes		2	2	2	2	2	2	2	3
Type of control		Remote Control	Remote Control	Remote Control	Remote Control	Remote Control	Remote Control	Remote Control	Remote Control
OPTIONAL ACCESSORIES[2]									
Recirculation filter kit									Filters Included
CleanAir recirculating flat module (Stainless Steel)					Z52JXC1N1			Z52JXC1N1	
CleanAir recirculating flat module (White)					Z52JXC1W1			Z52JXC1W1	
CleanAir plus recirculating module (Stainless Steel)		Z52JCC1N6	Z52JCC1N6	Z52JCC1N6		Z52JCC1N6	Z52JCC1N6		
CleanAir plus recirculating module (White)		Z52JCC1W6	Z52JCC1W6	Z52JCC1W6		Z52JCC1W6	Z52JCC1W6		
Long life regenerative recirculation module (Stainless Steel)		Z52JCD0N0	Z52JCD0N0	Z52JCD0N0		Z52JCD0N0	Z52JCD0N0		
Long life regenerative recirculation module (White)		Z52JCD0W0	Z52JCD0W0	Z52JCD0W0		Z52JCD0W0	Z52JCD0W0		
PERFORMANCE / TECHNICAL INFORMATION									
Appliance width	mm	900	1200	900	900	900	900	900	1050
Extraction Rate in m³/h [3,4]									
Power level 1 ducted / recirculating		265 / 197	265 / 200	265 / 200	252 / 198	265 / 200	265 / 200	190 / 167	/ 164
Power level 2 ducted / recirculating		331 / 313	335 / 316	335 / 316	336 / 257	335 / 316	335 / 316	265 / 221	/ 322
Power level 3 ducted / recirculating		458 / 419	458 / 422	458 / 422	434 / 336	458 / 422	458 / 422	400 / 423	/ 409
Intensive level 1 ducted / recirculating		672 / 537	594 / 513	594 / 513	581 / 466	594 / 513	594 / 513		/ 502
Intensive level 2 ducted / recirculating		933 / 637	798 / 565	798 / 565	734 / 574	798 / 565	798 / 565	690 / 588	/ 580
Noise level (sound power) based on dB(A) re 1 pW [3,5]									
Power level 1 ducted / recirculating		41 / 47	41 / 46	41 / 46	47 / 48	41 / 46	41 / 46	48 / 50	/ 43
Power level 2 ducted / recirculating		47 / 56	47 / 57	47 / 57	55 / 55	47 / 57	47 / 57	55 / 58	/ 62
Power level 3 ducted / recirculating		56 / 63	56 / 63	56 / 63	61 / 61	56 / 63	56 / 63	65 / 69	/ 68
Intensive level 1 ducted / recirculating		64 / 68	62 / 67	62 / 67	68 / 71	62 / 67	62 / 67		/ 73
Intensive level 2 ducted / recirculating		70 / 72	68 / 69	68 / 69	72 / 74	68 / 69	68 / 69	73 / 74	/ 76
Pipe outlet diameter	mm	150	150	150	150	150	150	150	
Minimum distance above an electric hob / gas hob[6]	mm	650 / 650	650 / 650	650 / 650	650 / 650	650 / 650	650 / 650	650 / 900	650 / 650
GB plug		●	●	●	●	●	●	●	
Energy Rating		A	A	A	A	A	A	B	

[1]Power automatically reverts back to normal setting after intensive. [2]A type of recirculating kit is required if recirculating. [3]Air Flow and noise declarations made in line with CECED Code of Conduct. [4]Measured according to EN61591 on largest pipe diameter. [5]Sound power measured according to EN60704-3 on largest pipe diameter. [6]From top of pan supports. Depending on the model, a 'Recirculating odour filter kit' will consist of the following items: Charcoal filter, flexible hose, air duct, fixing components, installation instructions.

ISLAND HOODS

The ideal solution for contemporary kitchens

Our island hoods are a stunning way to showcase a central cooking and preparation space. Available with stylish flat glass and box designs, the range is designed to complement our gas, ceramic and induction hobs. With height adjustable chimney sections, there are options to suit all ceiling heights too.

I96BMV5N5B
Island Hood (900mm width) **N 90**

DESIGN PERFORMANCE

HOOD TYPE		ISLAND	ISLAND	ISLAND
MODEL		I96BMV5N5B	I96BMP5N0B	I95GBE2N0B
COLLECTION		N 90	N 70	N 50
Colour		Stainless Steel	Stainless Steel	Stainless Steel & Glass
SPECIAL FEATURES				
Home Connect		●		
Adjustable LED white colour temperature		●		
Ambient light				
Climate control sensor		●		
Hob Hood control		●		
Efficient Drive		●	●	
Intensive setting / Automatic intensive revert [1]		● / ●	● / ●	● / ●
Boost position (Angled & Flat Hoods)				
NEFF Silence function		●	●	
Filter saturation indicator		●	●	
FEATURES				
Suitable for ducted operation / recirculating		● / ●	● / ●	● / ●
Electronic power level display		●	●	
Power levels		3 + 2 Intensive	3 + 2 Intensive	3 + 1 Intensive
NEFF Fresh Air (Interval operation)		●	●	
Automatic after running	minutes	10	10	
Lighting		4 x LED lights	4 x LED lights	4 x LED lights
Softlight with dimmer function		●	●	
Number of metal grease filter cassettes		3	3	2
Type of control		Touch Control	Touch Control	Soft Touch
OPTIONAL ACCESSORIES [2]				
Standard recirculation kit [2]		Z5106X5	Z5106X5	Z5105X5
CleanAir plus external recirculation module (Stainless Steel)		Z52CXC2N6	Z52CXC2N6	Z52CXC1N6
Long life external recirculation module (Stainless Steel)		Z52CBD2X1	Z52CBD2X1	
PERFORMANCE / TECHNICAL INFORMATION				
Appliance width	mm	900	900	900
Extraction Rate in m³ / h [3,4]				
Power level 1 ducted / recirculating		281 / 171	281 / 171	243 / 173
Power level 2 ducted / recirculating		361 / 266	361 / 266	328 / 253
Power level 3 ducted / recirculating		445 / 313	445 / 313	429 / 315
Intensive level 1 ducted / recirculating		657 / 364	657 / 364	732 / 384
Intensive level 2 ducted / recirculating		867 / 391	867 / 391	
Noise level (sound power) based on dB(A) re 1 pW [3,5]				
Power level 1 ducted / recirculating		44 / 59	44 / 59	47 / 62
Power level 2 ducted / recirculating		49 / 68	49 / 68	54 / 69
Power level 3 ducted / recirculating		54 / 71	54 / 71	60 / 73
Intensive level 1 ducted / recirculating		63 / 73	63 / 73	71 / 77
Intensive level 2 ducted / recirculating		69 / 74	69 / 74	
Pipe outlet diameter	mm	150 / 120	150 / 120	150 / 120
Minimum distance above an electric hob / gas hob [6]	mm	550 / 650	550 / 650	550 / 650
GB plug		●	●	●
Energy Rating		A	A+	B

[1]Power automatically reverts back to normal setting after intensive. [2]A type of recirculating kit is required if recirculating. [3]Air Flow and noise declarations made in line with CECED Code of Conduct. [4]Measured according to EN61591 on largest pipe diameter. [5]Sound power measured according to EN60704-3 on largest pipe diameter. [6]From top of pan supports. Depending on the model, a 'Recirculating odour filter kit' will consist of the following items: Charcoal filter, flexible hose, air duct, fixing components, installation instructions.

WALL INSTALLATION HOODS

The focal point of any kitchen

Hoods installed on the wall can be used to create a design feature in themselves, adding a focal point to your kitchen while offering powerful extraction for all types of cooking. Choose from a range of styles to suit your kitchen design, including the new Creative Slim hoods or Angled Glass hoods with features such as Ambient Light that let you express yourself with colour, as well as your cooking. And if choosing to install in recirculation, the hood can be fitted without a chimney piece for a sleeker finish to your hood installation.

LED LIGHTING AVAILABLE ACROSS ALL BELOW MODELS

D96IKW1S0B
Premium Angled Chimney Hood (900mm width) **N 90**

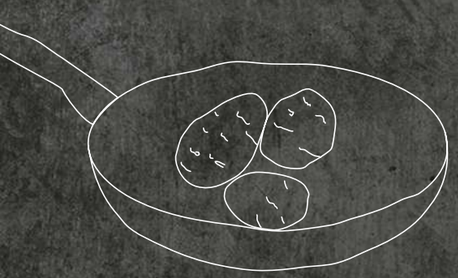

DESIGN PERFORMANCE

HOOD TYPE		ANGLED	ANGLED	ANGLED		ANGLED	
MODEL WIDE		D96IKW1S0B	D95IMT1N0B	D95IHM1S0B		D85IEE1S0B	
MODEL SLIM				D65IHM1S0B		D65IEE1S0B	
COLLECTION		N 90	N 90	N 50		N 30	
Colour		Black or black glass	Black or black glass	Black or black glass		Stainless steel & black glass	
SPECIAL FEATURES							
Home Connect		●					
Adjustable LED white colour temperature							
Ambient light		●	●				
Climate control sensor		●					
Hob Hood control		●					
Efficient Drive		●	●				
Intensive setting / Automatic intensive revert[1]		● / ●	● / ●	● / ●		● / ●	
Boost position (Angled & Flat Hoods)		●	●				
NEFF Silence function		●	●				
Filter saturation indicator		●	●				
FEATURES							
Suitable for ducted operation / recirculating		● / ●	● / ●	● / ●		● / ●	
Electronic power level display		●	●				
Power levels		3 + 2 Intensive	3 + 2 Intensive	3 + 1 Intensive		3 + 1 Intensive	
NEFF Fresh Air (Interval operation)		●	●				
Automatic after running	minutes	10	10				
Lighting		2 x LED lights	2 x LED lights	2 x LED lights		2 x LED lights	
Softlight with dimmer function		●	●				
Number of metal grease filter cassettes		2	2	2		2	
Type of control		Touch Control	Touch Control	Touch Control		Touch Control	
OPTIONAL ACCESSORIES[2]							
Standard recirculation kit		Z51AIU0X0	Z51AIU0X0	Z51AIU0X0		Z51EIU1X1	
Standard recirculation kit (chimless installation)		Z51AIT0X0	Z51AIT0X0	Z51AIT0X0			
CleanAir plus external recirculation module (Stainless Steel)		Z51AXC1N6	Z51AXC1N6	Z51AXC1N6		Z51FXC1N6	
Long life regenerative recirculation kit		Z51AIS0X0	Z51AIS0X0	Z51AIS0X0			
Long life regenerative integrated recirculation kit						Z51FXJ0X0	
Long life regenerative recirculation kit (chimless installation)		Z51AIR0X0	Z51AIR0X0	Z51AIR0X0			
Black chimney		Z91AXE1S1	Z91AXE1S1	Z91AXE1S1			
PERFORMANCE / TECHNICAL INFORMATION							
Appliance width	mm	890	895	890	590	800	600
Extraction Rate in m³/h[3,4]							
Power level 1 ducted / recirculating		293 / 191	305 / 198	253 / 218	253 / 218	245 / 189	245 / 189
Power level 2 ducted / recirculating		342 / 317	342 / 318	332 / 293	332 / 293	320 / 260	320 / 260
Power level 3 ducted / recirculating		467 / 430	431 / 399	416 / 388	416 / 388	399 / 320	399 / 320
Intensive level 1 ducted / recirculating		612 / 525	525 / 473	700 / 557	700 / 557	669 / 398	669 / 398
Intensive level 2 ducted / recirculating		837 / 583	714 / 542				
Noise level (sound power) based on dB(A) re 1 pW[3,5]							
Power level 1 ducted / recirculating		43 / 50	45 / 51	48 / 55	48 / 55	48 / 58	48 / 58
Power level 2 ducted / recirculating		47 / 60	48 / 61	53 / 60	53 / 60	55 / 65	55 / 65
Power level 3 ducted / recirculating		55 / 67	53 / 66	58 / 66	58 / 66	60 / 69	60 / 69
Intensive level 1 ducted / recirculating		61 / 72	58 / 74	67 / 75	67 / 75	69 / 76	69 / 76
Intensive level 2 ducted / recirculating		67 / 75	65 / 75				
Pipe outlet diameter	mm	150 / 120	150 / 120	150 / 120	150 / 120	150 / 120	150 / 120
Minimum distance above an electric hob / gas hob[6]	mm	450 / 600	450 / 600	450 / 600	450 / 600	450 / 600	450 / 600
GB plug		●	●	●		●	
Energy Rating		A+	A	B		B	

[1]Power automatically reverts back to normal setting after intensive. [2]A type of recirculating kit is required if recirculating. [3]Air Flow and noise declarations made in line with CECED Code of Conduct. [4]Measured according to EN61591 on largest pipe diameter. [5]Sound power measured according to EN60704-3 on largest pipe diameter. [6]From top of pan supports. Depending on the model, a 'Recirculating odour filter kit' will consist of the following items: Charcoal filter, flexible hose, air duct, fixing components, installation instructions.

WALL INSTALLATION HOODS

A kitchen to create in

Why choose between style and effectiveness when you can have both? Our Creative Slim hood illuminates your space in ambient lighting while keeping the room free from steam and odours. With a climate controlled automatic system, your ventilation is tailored to your cooking as soon as you turn the hob on – ideal when you need your hands free.

D95FMW1N0B
Creative Slim Hood (900mm width) **N 90**

DESIGN PERFORMANCE

D95FRM1S0B
Creative Slim Hood (900mm width) **N 70**

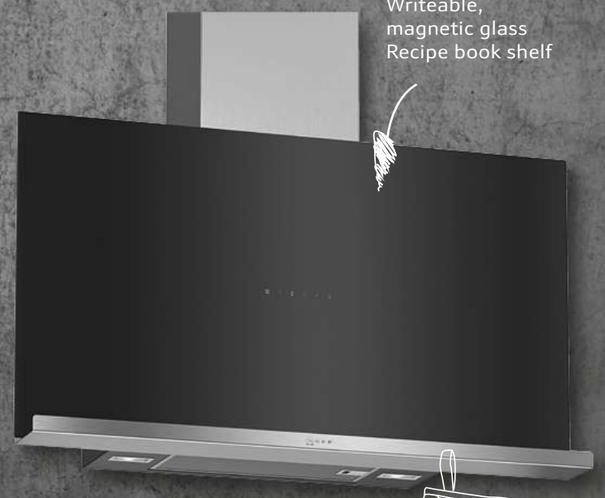

Writeable, magnetic glass Recipe book shelf

DESIGN PERFORMANCE

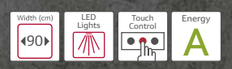

This NEFF Creative Slim Hood cannot be used with a gas hob.

HOOD TYPE		FLAT SLIMLINE	CREATIVE SLIM
MODEL		D95FMW1N0B	D95FRM1S0B
COLLECTION		N 90	N 70
Colour		Black Glass	Black Glass
SPECIAL FEATURES			
Home Connect		●	
Adjustable LED white colour temperature			
Ambient light		●	
Climate control sensor		●	
Hob Hood control		●	
Efficient Drive		●	●
Intensive setting / Automatic intensive revert [1]		● / ●	● / ●
Boost position (Angled & Flat Hoods)		●	●
NEFF Silence function		●	
Filter saturation indicator		●	
FEATURES			
Suitable for ducted operation / recirculating		● / ●	● / ●
Electronic power level display		●	
Power levels		3 + 2 Intensive	3 + 1 Intensive
NEFF Fresh Air (Interval operation)		●	
Automatic after running	minutes	10	
Lighting		2 x LED lights	2 x LED lights
Softlight with dimmer function		●	
Number of metal grease filter cassettes		2	2
Type of control		Touch Control	Touch Control
OPTIONAL ACCESSORIES [2]			
Standard recirculation kit		Z51AFU0X0	Z51AFU0X0
Standard recirculation kit (chimless installation)		Z51AFT0X0	Z51AFT0X0
CleanAir plus external recirculation module (Stainless Steel)		Z51AXC1N6	Z51AXC1N6
Long life regenerative recirculation kit		Z51AFS0X0	Z51AFS0X0
Long life regenerative recirculation kit		Z51AFR0X0	Z51AFR0X0
Black chimney		Z91AXE1S1	Z91AXE1S1
PERFORMANCE / TECHNICAL INFORMATION			
Appliance width	mm	895	890
Extraction Rate in m³/h [3,4]			
Power level 1 - ducted / recirculating		227 / 130	231 / 125
Power level 2 - ducted / recirculating		320 / 218	331 / 214
Power level 3 - ducted / recirculating		394 / 294	404 / 288
Intensive level 1 - ducted / recirculating		532 / 409	739 / 510
Intensive level 2 - ducted / recirculating		717 / 527	
Noise level (sound power) based on dB(A) re 1 pW [3,5]			
Power level 1 - ducted / recirculating		43 / 43	44 / 48
Power level 2 - ducted / recirculating		52 / 54	53 / 58
Power level 3 - ducted / recirculating		57 / 60	58 / 63
Intensive level 1 - ducted / recirculating		64 / 67	71 / 73
Intensive level 2 - ducted / recirculating		70 / 73	
Pipe outlet diameter	mm	150 / 120	150 / 120
Minimum distance above an electric hob / gas hob[6]	mm	450 / 600	450 / Not suitable
GB plug		●	●
Energy Rating		B	A

[1]Power automatically reverts back to normal setting after intensive. [2]A type of recirculating kit is required if recirculating. [3]Air Flow and noise declarations made in line with CECED Code of Conduct. [4]Measured according to EN61591 on largest pipe diameter. [5]Sound power measured according to EN60704-3 on largest pipe diameter. [6]From top of pan supports. Depending on the model, a 'Recirculating odour filter kit' will consist of the following items: Charcoal filter, flexible hose, air duct, fixing components, installation instructions.

GLASS CHIMNEY HOODS

Modern and minimalistic for contemporary kitchens

Build a wall against bad odours with our sleek and stylish Glass Chimney Hoods. They fight humidity smells and smoke with clever, innovative functions that work quietly and skilfully. As a result, nothing can come in the way of your culinary magic.

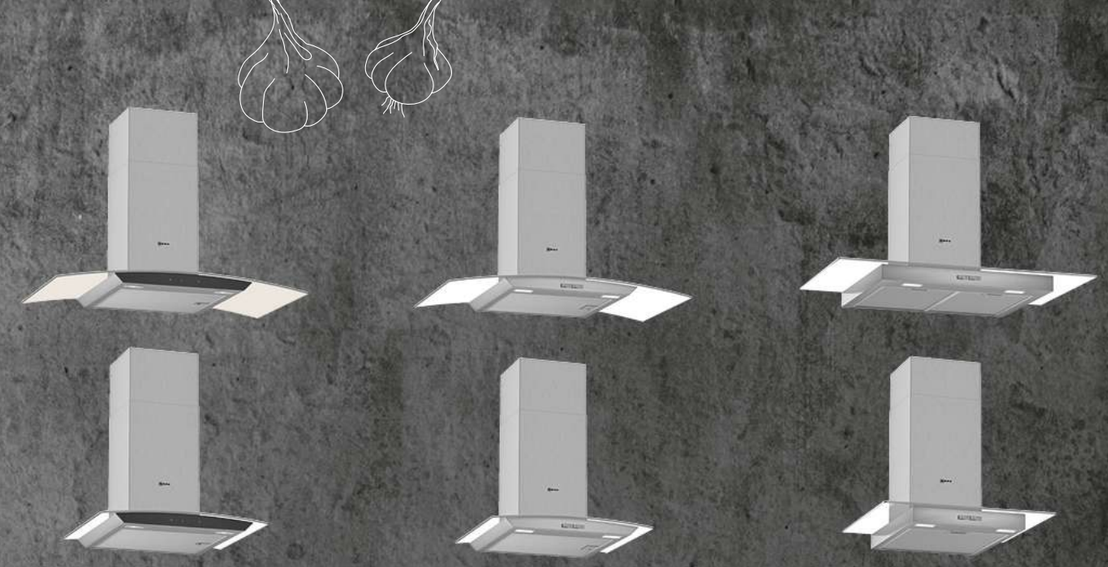

D94AFM1N0B
Curved Glass Chimney Hood (900m width) **N 50**

DESIGN PERFORMANCE

Width (cm) 90 | Width (cm) 60 | LED Lights | Touch Control | Energy A

HOOD TYPE		CURVED GLASS		CURVED GLASS		STRAIGHT GLASS	
90 CM MODEL		D94AFM1N0B		D94ABC0N0B		D94GBC0N0B	
60CM MODEL		D64AFM1N0B		D64ABC0N0B		D64GBC0N0B	
COLLECTION		N 50		N 30		N 30	
Colour		Stainless Steel & Glass		Stainless Steel & Glass		Stainless Steel & Glass	
SPECIAL FEATURES							
Home Connect							
Adjustable LED white colour temperature							
Ambient light							
Climate control sensor							
Hob Hood control							
Efficient Drive							
Intensive setting / Automatic intensive revert [1]		● / ●					
Boost position (Angled & Flat Hoods)							
NEFF Silence function							
Filter saturation indicator							
FEATURES							
Suitable for ducted operation / recirculating		● / ●		● / ●		● / ●	
Electronic power level display		3 + 1 Intensive		3		3	
Power levels							
NEFF Fresh Air (Interval operation)							
Automatic after running	minutes						
Lighting		2 x LED lights		2 x LED lights		2 x LED lights	
Softlight with dimmer function							
Number of metal grease filter cassettes		2	1	2	1	2	1
Type of control		Touch Control		Push Buttons		Push Buttons	
OPTIONAL ACCESSORIES [2]							
Standard recirculation kit		Z51DXU0X0		Z51DXU0X0		Z51DXU0X0	
CleanAir plus external recirculation module (Stainless Steel)		Z51FXC1N6		Z51FXC1N6		Z51FXC1N6	
CleanAir plus integrated recirculation kit		Z51DXI1X6		Z51DXI1X6		Z51DXI1X6	
Long life regenerative integrated recirculation kit		Z51FXJ0X0		Z51FXJ0X0		Z51FXJ0X0	
PERFORMANCE / TECHNICAL INFORMATION							
Appliance width	mm	900 / 600		900 / 600		900 / 600	
Extraction rate in m³/h [3,4]							
Power level 1 - ducted / recirculating		234 / 164	239 / 173	241 / 163	241 / 172	261 / 181	266 / 192
Power level 2 - ducted / recirculating		303 / 236	306 / 250	309 / 234	309 / 245	326 / 252	330 / 260
Power level 3 - ducted / recirculating		371 / 292	400 / 303	612 / 351	612 / 365	650 / 361	649 / 365
Intensive level 1 - ducted / recirculating		610 / 355	615 / 361				
Intensive level 2 - ducted / recirculating							
Noise level (sound power) based on db(a) re 1 pw [3,5]							
Power level 1 - ducted / recirculating		48 / 60	48 / 59	48 / 60	46 / 60	48 / 60	51 / 60
Power level 2 - ducted / recirculating		55 / 68	54 / 67	54 / 68	53 / 67	55 / 67	57 / 67
Power level 3 - ducted / recirculating		61 / 72	59 / 71	69 / 75	68 / 75	69 / 76	70 / 75
Intensive level 1 - ducted / recirculating		69 / 75	69 / 75				
Intensive level 2 - ducted / recirculating							
Pipe outlet diameter	mm	150 / 120		150 / 120		150 / 120	
Minimum distance above an electric hob / gas hob [6]	mm	550 / 650		550 / 650		550 / 650	
Gb plug		●		●		●	
Energy rating		B		B		A	A

[1] Power automatically reverts back to normal setting after intensive. [2] A type of recirculating kit is required if recirculating. [3] Air Flow and noise declarations made in line with CECED Code of Conduct. [4] Measured according to EN61591 on largest pipe diameter. [5] Sound power measured according to EN60704-3 on largest pipe diameter. [6] From top of pan supports. Depending on the model, a 'Recirculating odour filter kit' will consist of the following items: Charcoal filter, flexible hose, air duct, fixing components, installation instructions.

BOX CHIMNEY HOODS

The focal point of any kitchen

It's amazing when a steak is sizzling in your pan, and the smell is part of an exciting cooking experience. But there are some kitchen odours nobody is too fond of. Enter our quiet but powerful Box Chimney Hoods where fresh air is guaranteed.

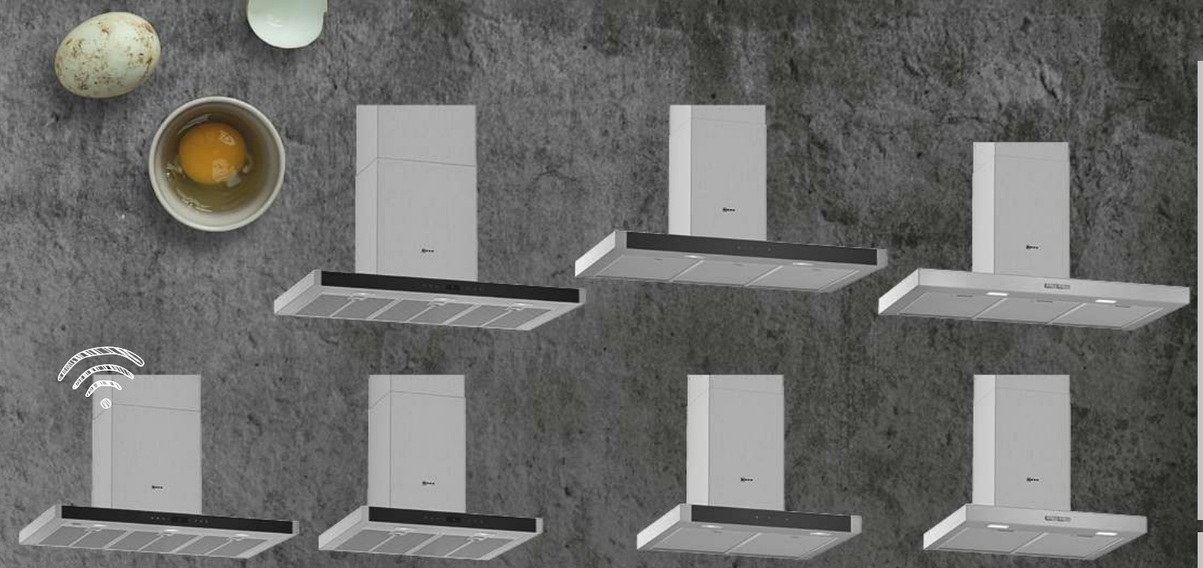

D96BMV5N5B
Box Chimney Hood (900mm width) **N 90**

DESIGN / PERFORMANCE

Width (cm) 90 | Touch Control | LED Lights | Energy A+ | COOKTOP-BASED HOOD CONTROL | AUTOMATIC AIR SENSOR

D95BMP5N0B
Box Chimney Hood (900mm width) **N 70**

DESIGN / PERFORMANCE

Width (cm) 90 | Touch Control | LED Lights | Energy A+

CHANGE SETTINGS WITH EASE AND MAKE CLEANING A BREEZE WITH TOUCH CONTROL

HOOD TYPE		BOX CHIMNEY	BOX CHIMNEY		BOX CHIMNEY		BOX CHIMNEY	
90 CM MODEL		D96BMV5N5B	D95BMP5N0B		D94BHM1N0B		D92BBC0N0B	
60CM MODEL			D65BMP5N0B		D64BHM1N0B		D62BBC0N0B	
COLLECTION		N 90	N 70		N 50		N 30	
Colour		Stainless steel	Stainless steel		Stainless steel		Stainless steel	
SPECIAL FEATURES								
Home Connect		●						
Adjustable LED white colour temperature		●						
Ambient light								
Climate control sensor		●						
Hob Hood control		●						
Efficient Drive		●	●					
Intensive setting / Automatic intensive revert[1]		● / ●	● / ●		● / ●			
Boost position (Angled & Flat Hoods)								
NEFF Silence function		●	●					
Filter saturation indicator		●	●					
FEATURES								
Suitable for ducted operation/recirculating		● / ●	● / ●		● / ●		● / ●	
Electronic power level display		●	●					
Power levels		3 + 2 Intensive	3 + 1 Intensive		3 + 1 Intensive			
NEFF Fresh Air (Interval operation)		●	●					
Automatic after running	minutes	10	10					
Lighting		3 x LED lights	3 x LED	2 x LED	2 x LED		2 x LED	
Softlight with dimmer function		●	●					
Number of metal grease filter cassettes		3	3	2	3	2	3	2
Type of control		Touch Control	Touch Control		Touch Control		Push Buttons	
OPTIONAL ACCESSORIES[2]								
Standard recirculation kit		Z5102X5	Z5102X5		Z51DXU0X0		Z51DXU0X0	
CleanAir plus external recirculation module (Stainless Steel)		Z51CXC2N6	Z51CXC2N6		Z51FXC1N6		Z51FXC1N6	
CleanAir plus integrated recirculation kit		Z51CXI1X6	Z51CXI1X6		Z51DXI1X6		Z51DXI1X6	
Long life regenerative integrated recirculation kit		Z51FXJ0X5	Z51FXJ0X5		Z51FXJ0X0		Z51FXJ0X0	
PERFORMANCE / TECHNICAL INFORMATION								
Appliance width	mm	900	900	600	900	600	900	600
Extraction Rate in m³/h[3,4]								
Power level 1 ducted / recirculating		273 / 168	289 / 168	247 / 159	222 / 147	238 / 150	198 / 120	198 / 122
Power level 2 ducted / recirculating		347 / 265	340 / 266	327 / 237	293 / 228	302 / 220	263 / 162	263 / 165
Power level 3 ducted / recirculating		430 / 311	427 / 324	413 / 281	372 / 2 90	368 / 281	365 / 195	365 / 197
Intensive level 1 ducted / recirculating		637 / 359	525 / 352	503 / 299	604 / 360	605 / 348		
Intensive level 2 ducted / recirculating		843 / 385	702 / 378	657 / 322				
Noise level (sound power) based on dB(A) re 1 pW[3,5]								
Power level 1 ducted / recirculating		46 / 58	45 / 55	46 / 59	48 / 57	48 / 57	49 / 55	49 / 56
Power level 2 ducted / recirculating		51 / 66	50 / 65	55 / 68	54 / 66	54 / 66	57 / 61	57 / 61
Power level 3 ducted / recirculating		55 / 69	55 / 70	61 / 72	60 / 71	60 / 71	64 / 66	63 / 66
Intensive level 1 ducted / recirculating		64 / 72	60 / 72	66 / 74	70 / 75	69 / 75		
Intensive level 2 ducted / recirculating		69 / 74	66 / 73	71 / 75				
Pipe outlet diameter	mm	150 / 120	150 / 120		150 / 120		150 / 120	
Minimum distance above an electric hob / gas hob[6]	mm	550 / 650	550 / 650		550 / 650		550 / 650	
GB plug		●	●		●		●	
Energy Rating		A+	A		B		D	

[1]Power automatically reverts back to normal setting after intensive. [2]A type of recirculating kit is required if recirculating. [3]Air Flow and noise declarations made in line with CECED Code of Conduct. [4]Measured according to EN61591 on largest pipe diameter. [5]Sound power measured according to EN60704-3 on largest pipe diameter. [6]From top of pan supports. Depending on the model, a 'Recirculating odour filter kit' will consist of the following items: Charcoal filter, flexible hose, air duct, fixing components, installation instructions.

PYRAMID CHIMNEY HOODS

Classic and striking designs for modern kitchens

Stop the smell, not the conversation. For us, cooking is all about enjoying tasty food with family and friends. That's why our quiet Pyramid Chimney Hoods ensure nothing gets in the way of conversation.

D94QFM1N0B
Pyramid Chimney Hood (900mm width) **N 50**

D92PBC0N0B
Pyramid Chimney Hood (900mm width) **N 30**

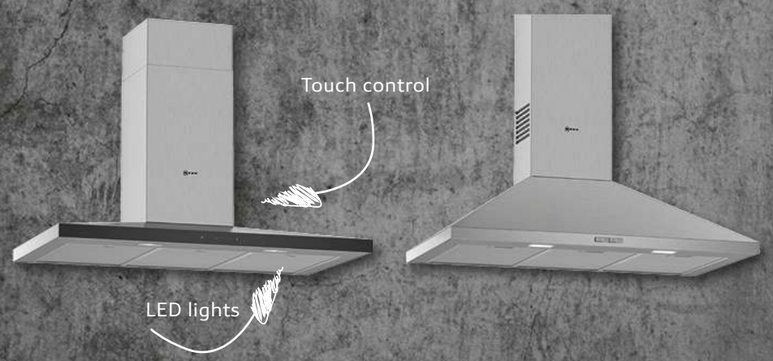

DESIGN PERFORMANCE

Width (cm) 90 | Width (cm) 60 | Touch Control | LED Lights | Energy A

DESIGN PERFORMANCE

Width (cm) 90 | Width (cm) 75 | Width (cm) 60 | LED Lights | Energy C

STRIKING DESIGN FOR MODERN KITCHENS

HOOD TYPE	SLIM PYRAMID	SLIM PYRAMID	PYRAMID CHIMNEY		
90CM MODEL	D94QFM1N0B	D92QBC0N0B	D92PBC0N0B		
75CM MODEL			D72PBC0N0B		
60CM MODEL	D64QFM1N0B	D62QBC0N0B	D62PBC0N0B		
COLLECTION	N 50	N 30	N 30		
Colour	Stainless steel	Stainless steel	Stainless steel		
SPECIAL FEATURES					
Home Connect					
Adjustable LED white colour temperature					
Ambient light					
Climate control sensor					
Hob Hood control					
Efficient Drive					
Intensive setting / Automatic intensive revert [1]	● / ●				
Boost position (Angled & Flat Hoods)					
NEFF Silence function					
Filter saturation indicator					
FEATURES					
Suitable for ducted operation / recirculating	● / ●	● / ●	● / ●		
Electronic power level display					
Power levels	3 + 1 Intensive	3	3		
NEFF Fresh Air (Interval operation)					
Automatic after running minutes					
Lighting	2 x LED lights	2 x LED lights	2 x LED lights		
Softlight with dimmer function					
Number of metal grease filter cassettes	3	3 / 2	2		
Type of control	Touch Control	Push Buttons	Push Buttons		
OPTIONAL ACCESSORIES [2]					
Standard recirculation kit	Z51DXU0X0	Z51DXU0X0	Z5138X5		
CleanAir plus external recirculation module (Stainless Steel)	Z51FXC1N6	Z51FXC1N6			
CleanAir plus integrated recirculation kit	Z51DXI1X6	Z51DXI1X6			
Long life regenerative integrated recirculation kit	Z51FXJ0X0	Z51FXJ0X0			
PERFORMANCE / TECHNICAL INFORMATION					
Appliance width mm	900 / 600	900 / 600	900 / 750 / 600		
Extraction Rate in m³/h [3,4]					
Power level 1 ducted / recirculating	247 / 171 / 258 / 181	198 / 125 / 198 / 118	198 / 129 / 198 / 129 / 198 / 127		
Power level 2 ducted / recirculating	316 / 248 / 328 / 257	263 / 168 / 263 / 162	263 / 174 / 263 / 174 / 263 / 171		
Power level 3 ducted / recirculating	389 / 308 / 410 / 312	365 / 202 / 365 / 198	365 / 213 / 365 / 213 / 365 / 211		
Intensive level 1 ducted / recirculating	642 / 372 / 644 / 372				
Intensive level 2 ducted / recirculating					
Noise level (sound power) based on dB(A) re 1 pW [3,5]					
Power level 1 ducted / recirculating	48 / 58 / 50 / 60	50 / 55 / 50 / 55	50 / 56 / 50 / 56 / 50 / 55		
Power level 2 ducted / recirculating	55 / 66 / 56 / 68	59 / 62 / 58 / 61	57 / 62 / 57 / 62 / 58 / 62		
Power level 3 ducted / recirculating	61 / 71 / 62 / 72	64 / 66 / 64 / 65	65 / 67 / 65 / 67 / 66 / 67		
Intensive level 1 ducted / recirculating	70 / 75 / 70 / 75				
Intensive level 2 ducted / recirculating					
Pipe outlet diameter mm	150 / 120	150 / 120	150 / 120		
Minimum distance above an electric hob / gas hob[6] mm	550 / 650	550 / 650	550 / 650		
GB plug	●	●	●		
Energy Rating	A	D	D		

[1]Power automatically reverts back to normal setting after intensive. [2]A type of recirculating kit is required if recirculating. [3]Air Flow and noise declarations made in line with CECED Code of Conduct. [4]Measured according to EN61591 on largest pipe diameter. [5]Sound power measured according to EN60704-3 on largest pipe diameter. [6]From top of pan supports. Depending on the model, a 'Recirculating odour filter kit' will consist of the following items: Charcoal filter, flexible hose, air duct, fixing components, installation instructions.

TELESCOPIC HOODS

Always the right height

When you're cooking up a sumptuous meal, chances are, you're more focussed on what's inside the pots than what escapes them. Our telescopic hoods are well-trained in coping with steam and odours. They slide out when you need them, and can be pushed back, for a flush finish when you don't. With a lowering frame, the hood can disappear entirely from view. This compact, discreet set-up with subtle LED lighting has up to four highly capable speed settings. Any noise can be toned down further on demand with the Silence function, so nothing can spoil the kitchen conversation.

DISCREET YET POWERFUL EXTRACTION

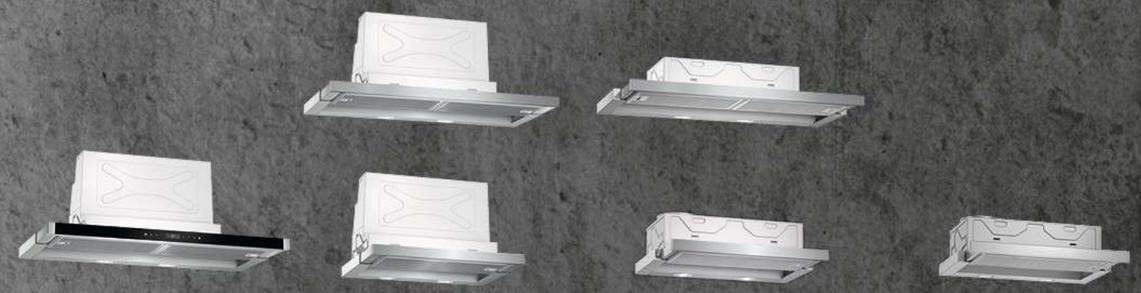

D49PU54X0B
Telescopic Hood (900mm width) **N 90**

DESIGN PERFORMANCE

D49ML54N0B
Telescopic Hood (900mm width) **N 70**

DESIGN PERFORMANCE

LOWERING FRAME MAKES ITS VENTILATION DEBUT

Providing the ultimate space-saving solution, our first hidden hood beautifully complements flush, integrated kitchen designs. 350mm minimum cabinet depth required.

1.

The hood remains completely hidden until you're ready to start cooking.

2.

Simply push under the front of the hood to lower into position.

3.

The telescopic hood easily extends on the smooth rails.

HOOD TYPE					
90CM MODEL	D49PU54X0B	D49ML54N0B	D49ED22N0B		
60CM MODEL		D46ML54N0B	D46ED22N0B		D46BR22N0B
COLLECTION	N 90	N 70	N 50		N 30
Colour	Stainless steel	Stainless steel	Stainless steel		Silver metallic lacquer
SPECIALFEATURES					
Home Connect					
Adjustable LED white colour temperature					
Ambient light					
Climate control sensor	●				
Hob Hood control					
Efficient Drive	●	●	●		
Intensive setting / Automatic intensive revert [1]	● / ●	● / ●	● / ●		
NEFF Silence function	●	●			
Filter saturation indicator	●	●			
FEATURES					
Suitable for ducted operation / recirculating	● / ●	● / ●	● / ●		● / ●
Furniture door required	●	●	●		●
Electronic power level display	●				
NEFF Fresh Air (Interval operation)	●	●			
Automatic after running minutes	10	10	10		
Lighting	2 x 3W LED lights	2 x 3W LED lights	2 x 3W LED lights		2 x 20W halogen
Softlight with dimmer function	●	●			
Type of control	Touch Control	Soft Touch	Soft Touch		Rocker switch
Power levels	3 + 2 Intensive	3 + 2 Intensive	3 + 1 Intensive		3
Number of metal grease filter cassettes	3	3	2	3	2	1
OPTIONAL ACCESSORIES [2]					
Standard recirculation kit	Z54TS02X0	Z54TS02X0		Z54TS01X0		Z54TS01X0
CleanAir plus anti-pollen recirculation kit	Z51IXC1X6	Z51IXC1X6				
Long life regenerative recirculation kit	Z51ITD1X1	Z51ITD1X1				
Steel finish profile / handle with opening for VarioControl		Z54TF90N0	Z54TF60N0			
Steel finish profile / handle with logo		Z54TH90D0	Z54TH60D0	Z54TH90D0	Z54TH60D0	
Lowering frame	Z54TL90X0	Z54TL90X0	Z54TL60X0			
Bracket for installation in 90cm wide units	Z54TM90X0	Z54TM90X0				
PERFORMANCE / TECHNICAL INFORMATION					
Appliance width mm	900	900	600	900	600	600
Extraction Rate in m³/h [3,4]						
Ducted power level 1 / recirculating power level 1	210 / 135	210 / 135	198 / 137	163 / 105	174 / 102	255 / 164
Ducted power level 2 / recirculating power level 2	306 / 220	306 / 220	296 / 220	223 / 140	226 / 135	315 / 183
Ducted power level 3 / recirculating power level 3	394 / 293	394 / 293	381 / 292	265 / 166	270 / 159	387 / 195
Ducted intensive / recirculating intensive	708 / 471	708 / 471	677 / 475	412 / 178	404 / 171	
Noise level (sound power) based on dB(A) re 1 pW [3,5]						
Ducted power level 1 / recirculating power level 1	40 / 45	40 / 45	40 / 45	50 / 57	49 / 58	60 / 70
Ducted power level 2 / recirculating power level 2	49 / 55	49 / 55	49 / 55	56 / 65	56 / 65	64 / 72
Ducted power level 3 / recirculating power level 3	56 / 61	56 / 61	56 / 61	63 / 70	62 / 70	67 / 74
Ducted intensive / recirculating intensive	68 / 74	68 / 74	67 / 73	70 / 71	69 / 72	
Pipe outlet diameter mm	150 / 120	150 / 120		150 / 120		150 / 120
Minimum distance above an electric hob / gas hob[6] mm	430 / 650	430 / 650		430 / 650		430 / 650
GB plug	●	●		●		●
Energy	B	B		A		C

[1]Power automatically reverts back to normal setting after intensive. [2]A type of recirculating kit is required if recirculating. [3]Air Flow and noise declarations made in line with CECED Code of Conduct. [4]Measured according to EN61591 on largest pipe diameter. [5]Sound power measured according to EN60704-3 on largest pipe diameter. [6]From top of pan supports. Depending on the model, a 'Recirculating odour filter kit' will consist of the following items: Charcoal filter, flexible hose, air duct, fixing components, installation instructions.

CANOPY HOODS

Room for inspiration

A great kitchen atmosphere is not just about the people you've invited or the meal you're cooking. A clear view to focus on your creations is a must, too. Our space-saving canopy hoods cleanse the air skilfully and quietly – allowing everyone to join the conversation. Another helpful idea: the metal filter cassettes are easily removable and dishwasher-safe.

ROOM FOR INSPIRATION

D94XAF8N0B
Canopy Hood (900mm width) **N 70**

The new N70 canopy hoods come in full 90cm and 60cm widths and are easy to install due to replacing the bottom of the cabinet. Thanks to their design, they make even more space in your kitchen.

Additional accessories for a sleek look inside the cabinet:
Z51IBN0N0 - Chimney extension 185-362mm
Z51IBG0N0 - Chimney extension 120mm

DESIGN PERFORMANCE

Width (cm) 90 | LED Lights | Energy B

HOOD TYPE	CANOPY	CANOPY	CANOPY	CANOPY	CANOPY
WIDE MODEL	D57ML67N1B	D94XAF8N0B	D57MH56N0B	D5855X1GB	
STANDARD MODEL		D64XAF8N0B	D55MH56N0B	D5655X1GB	D51NAA1C0B
COLLECTION	N 90	N 70	N 50	N 30	N 30
Colour	Stainless Steel and Black Glass	Stainless steel	Stainless steel	Silver metallic lacquer	Silver Metallic Lacquer
SPECIAL FEATURES					
Home Connect					
Adjustable LED white colour temperature					
Ambient light					
Climate control sensor					
Hob Hood control					
Efficient Drive					
Intensive setting / Automatic intensive revert [1]	● / ●		● / ●	● /	
NEFF Silence function					
Filter saturation indicator	●				
FEATURES					
Suitable for ducted operation / recirculating	● / ●	● / ●	● / ●	● / ●	● / ●
Furniture door required					
Electronic power level display					
NEFF Fresh Air (Interval operation)					
Automatic after running minutes	30				
Lighting	2 x LED light	2 x LED light	2 x LED light	2 x LED light	2 x LED lights
Softlight with dimmer function	●				
Type of control	Soft Touch	Rotary switch	Soft Touch	Slider switch	Slider switch
Power levels	3 + 1 Intensive	3	3 + 1 Intensive	3 + 1 Intensive	3
Number of metal grease filter cassettes	2	2 / 1	2 / 1	2	1
OPTIONAL ACCESSORIES [2]					
Standard recirculation filter / kit	Z5135X3	Z51IBU0X0	Z5135X3	Z5155X0	Z51INT0X0
CleanAir plus anti-pollen recirculation kit	Z51IXC1X6	Z51IXC1X6	Z51IXC1X6		
Long life regenerative recirculation kit	Z51ITD1X1	Z51ITD1X1	Z51ITD1X1		
PERFORMANCE / TECHNICAL INFORMATION					
Appliance width mm	700	894 / 594	700 / 520	730 / 530	530
Extraction Rate in m³/h [3,4]					
Ducted power level 1 / recirculating power level 1	210 / 170	230 / 210 / 230 / 210	345 / 210 / 330 / 200	198 / 139 / 196 / 134	120 / 110
Ducted power level 2 / recirculating power level 2	380 / 250	360 / 330 / 335 / 330	540 / 270 / 500 / 250	287 / 206 / 280 / 198	160 / 160
Ducted power level 3 / recirculating power level 3	575 / 310	610 / 440 / 610 / 440	630 / 300 / 575 / 280	379 / 278 / 362 / 268	302 / 300
Ducted intensive / recirculating intensive	775 / 380		730 / 310 / 650 / 290	638 / 408 / 618 / 395	
Noise level (sound power) based on dB(A) re 1 pW [3,5]					
Ducted power level 1 / recirculating power level 1	46 / 57	49 / 60 / 49 / 60	53 / 69 / 53 / 67	38 / 49 / 38 / 49	46 / 49
Ducted power level 2 / recirculating power level 2	55 / 66	56 / 69 / 56 / 69	63 / 71 / 64 / 71	49 / 58 / 49 / 58	50 / 53
Ducted power level 3 / recirculating power level 3	64 / 71	70 / 75 / 70 / 75	66 / 73 / 67 / 73	56 / 65 / 56 / 64	62 / 65
Ducted intensive / recirculating intensive	70 / 75		69 / 74 / 70 / 74	68 / 72 / 68 / 72	
Pipe outlet diameter mm	150 / 120	150 / 120	150 / 120	150 / 120	120
Minimum distance above an electric hob / gas hob[6] mm	500 / 650	500 / 500	500 / 650	650 / 650	550 / 650
GB plug	●	●	●	●	●
Energy	A++	B	C	C	D

[1]Power automatically reverts back to normal setting after intensive. [2]A type of recirculating kit is required if recirculating. [3]Air Flow and noise declarations made in line with CECED Code of Conduct. [4]Measured according to EN61591 on largest pipe diameter. [5]Sound power measured according to EN60704-3 on largest pipe diameter. [6]From top of pan supports. Depending on the model, a 'Recirculating odour filter kit' will consist of the following items: Charcoal filter, flexible hose, air duct, fixing components, installation instructions.

INTEGRATED HOODS

Great for masking smells

When all your friends sit around the table, just waiting for one of your treats to be served, you don't want steam or smoke disturbing the atmosphere. Our discreet integrated hoods work with three speeds to cleanse the kitchen air. While they do their job with a minimum of noise, LED lights shine a warm light on your bubbling pots and pans. Fitted between two kitchen cabinets, they hide behind a furniture door when you've finished cooking.

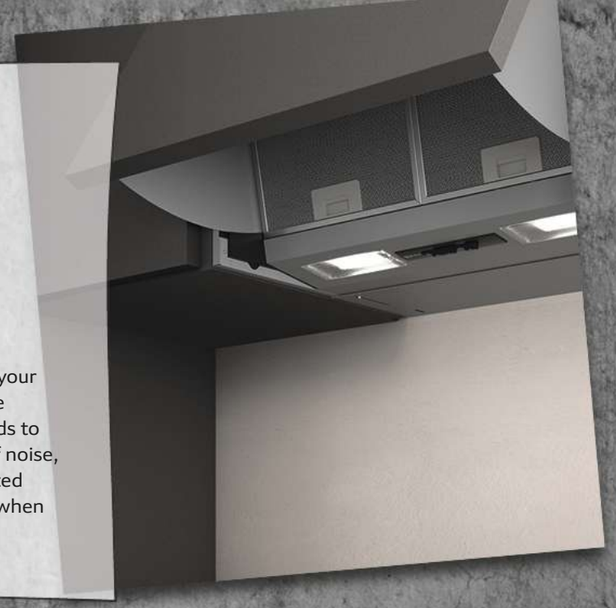

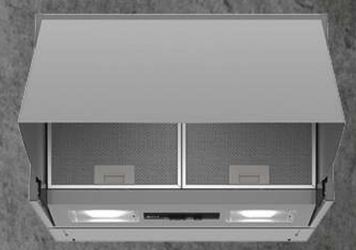

D64MAC1X0B
Integrated Hood (599mm width) **N 30**

HOOD TYPE	INTEGRATED	INTEGRATED
MODEL	D64MAC1X0B	D61MAC1X0B
COLLECTION	N 30	N 30
Colour	Silver metallic lacquer	Silver metallic lacquer
SPECIAL FEATURES		
Home Connect		
Adjustable LED white colour temperature		
Ambient light		
Climate control sensor		
Hob Hood control		
Efficient Drive		
Intensive setting / Automatic intensive revert [1]		
NEFF Silence function		
Filter saturation indicator		
FEATURES		
Suitable for ducted operation / recirculating	● / ●	● / ●
Furniture door required	●	●
Electronic power level display		
NEFF Fresh Air (Interval operation)		
Automatic after running minutes		
Additional noise insulation		
Lighting	2 x LED lights	2 x LED lights
Softlight with dimmer function		
Controls	Push buttons	Push buttons
Power levels	3	3
Number of metal grease filter cassettes	2	2
OPTIONAL ACCESSORIES [2]		
Standard recirculation filter / kit	Z51IMA0X0	Z51IMA0X0
PERFORMANCE / TECHNICAL INFORMATION		
Appliance width mm	599	599
Extraction Rate in m³/h [3,4]		
Ducted power level 1 / recirculating power level 1	256 / 208	240 / 224
Ducted power level 2 / recirculating power level 2	352 / 320	288 / 256
Ducted power level 3 / recirculating power level 3	625 / 416	368 / 272
Ducted intensive / recirculating intensive		
Noise level (sound power) based on dB(A) re 1 pW [3,5]		
Ducted power level 1 / recirculating power level 1	49 / 57	52 / 64
Ducted power level 2 / recirculating power level 2	56 / 68	56 / 67
Ducted power level 3 / recirculating power level 3	70 / 75	62 / 68
Ducted intensive / recirculating intensive		
Pipe outlet diameter mm	150 / 120	150 / 120
Minimum distance above an electric hob / gas hob[6] mm	500 / 650	500 / 650
GB plug	●	●
Energy	B	D

GREAT FOR ALL KITCHENS

DESIGN PERFORMANCE

Width (cm) 60 | LED Lights | Energy B

[1]Power automatically reverts back to normal setting after intensive. [2]A type of recirculating kit is required if recirculating. [3]Air Flow and noise declarations made in line with CECED Code of Conduct. [4]Measured according to EN61591 on largest pipe diameter. [5]Sound power measured according to EN60704-3 on largest pipe diameter. [6]From top of pan supports. Depending on the model, a 'Recirculating odour filter kit' will consist of the following items: Charcoal filter, flexible hose, air duct, fixing components, installation instructions.

BEHIND THE DOOR...

Whether it's washing dishes, lightening the laundry load or keeping your food as fresh as possible, NEFF have everything to make life easier. NEFF's integrated appliances do all the hard work behind the door so you don't have to. Working tirelessly and quietly in the background, you can enjoy getting creative in the kitchen with friends and family... carefree.

Baskets in dishwasher for illustrative purposes only – please see product specification for latest information.

COOLING

We have a range of fridges and freezers so there is something for everyone. Whether it is a large American-style fridge freezer, or a built-in fridge freezer, we're confident that there is a model to suit.
Fresh Safe– Keep ingredients fresher for longer. Herbs, fruits and vegetables stay crisp, vibrant and fresh retaining vital nutrients and vitamins and locking in flavour.

For more information on cooling installation options visit neff-home.com/uk/

DISHWASHING

A NEFF dishwasher is designed with creative cooks in mind. That means that even the most bubbled-over oven dishes, baked-on ramekins and caramelised grill pans will still come out beautifully clean.
Chef 70° – Extra cleaning power for creative cooks. With a hotter setting and a powerful spray, the Chef 70° programme is perfect for cleaning even the dirtiest pots, pans and cooking utensils. Items placed in the lower basket are subject to higher spray pressure, eliminating the need for soaking and effectively removing even the most stubborn areas.

For more information on dishwasher features visit neff-home.com/uk/

LAUNDRY

Our 3 types of models cover all your laundry needs: washing machines, washer dryer combination models and tumble dryers.
Time Light –The NEFF laundry range quietly washes, allowing you to multi-task while entertaining guests. The clever Time Light projects the remaining wash cycle onto your floor with no need to open the door to check on progress. Allowing you to keep one eye on your wash as well as your guests.

REFRIGERATION

Leading the way in food storage to ensure the freshest and tastiest food

We're constantly working to improve our range of fridges and freezers so there's something for everyone. Whether it's a large American-style fridge freezer that can cope with the demands of a hungry family, or a fridge freezer that integrates seamlessly into the kitchen furniture, we're confident that there's a model to suit. And to top it off, all of our refrigeration appliances have at least an A+ energy rating.

THE COLLECTION

Choosing the right appliance to complement your kitchen and lifestyle can be challenging. To help you select the perfect kitchen companion, we've introduced easy-to-follow Collections based on product features, technology, design and simplicity. There's a Collection to suit everyone.*

N 90

FEATURES

THIS COLLECTION CAN INCLUDE*:-

- Home Connect
- Fresh Safe 3
- No Frost
- Vario Shelf
- Wire Flex shelf
- Easy Access Shelf
- Easy Lift Shelf
- Flexi Rail Drawers
- Electronic 7 segment control
- Energy Rating: A++ or A+
- Super Cool
- Fresh Sense
- Soft Close/Fixed Hinge
- LED Light
- Super Freeze
- Big Box

N 70

FEATURES

THIS COLLECTION CAN INCLUDE*:-

- Fresh Safe 2
- No Frost/Low Frost
- Vario Shelf
- Easy Access Shelf
- Electronic 7 segment control
- Energy Rating: A++ or A+
- Super Cool
- Fresh Sense
- Fixed Hinge
- LED Light
- Super Freeze
- Big Box

N 50

FEATURES

THIS COLLECTION CAN INCLUDE*:-

- Fresh Safe
- No Frost or Low Frost
- Electronic Control
- Energy Rating: A++ or A+
- Super Cool
- Fixed or Sliding Hinge
- LED Light or Daylight
- Super Freeze
- Big box

N 30

FEATURES

THIS COLLECTION CAN INCLUDE*:-

- Vegetable drawer
- Manual Defrost
- Energy Rating: A+
- Sliding Hinge
- Interior Light

*The features included in each collection are an overview only. Please ensure that you check the product detail for exact features of each model.

COOL SOLUTIONS FOR EVERY COOK

Combination and layout solutions for installing your cooling appliances

With so many kitchen styles to choose from, at NEFF we've catered for all spaces and lifestyles. With the option to build a cooling solution to your requirements, our installation options are designed to offer the ultimate flexibility. From side-by-side fridge and freezer installations to over-under stacked installations, it's easy to incorporate NEFF appliances into your overall kitchen design.

For more information on cooling installation options visit **neff-home .com/uk/**

OVER/UNDER INSTALLATION:

Our over-under installation options are perfectly tailored to suit every Cookaholic's lifestyle. Conveniently 'stack' your fridge and freezer and ensure your cooling space reflects how you like to cook. For those who tend to shop little and often, a smaller capacity fridge & freezer doesn't need to impact on your space. Equally, if family life makes ample freezer space essential, an equal height '50/50' fridge freezer combination provides the perfect solution.

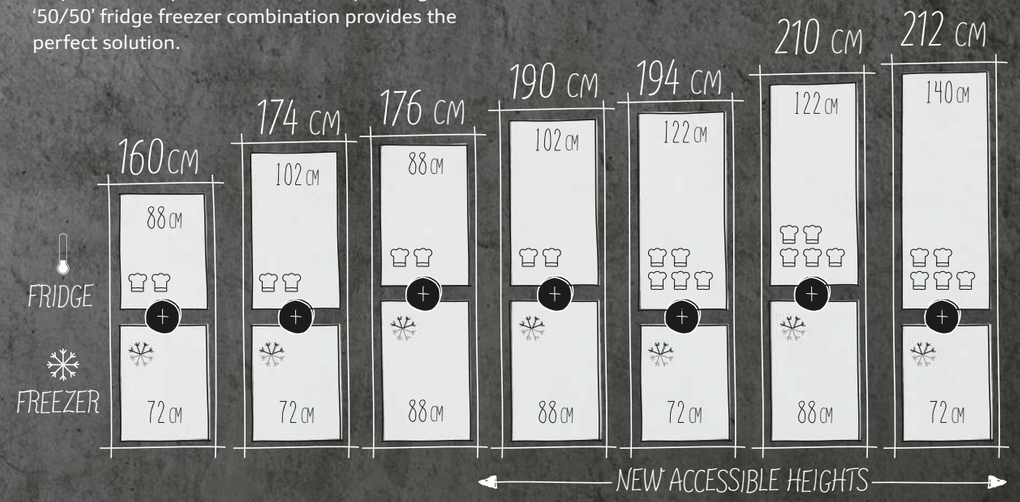

SIDE-BY-SIDE INSTALLATION:

Our single door fridges and freezers are designed to sit parallel to one another in order to create a double door effect. By placing a left-hinged fridge and a right-hinged freezer (or vice versa) side by side you can easily browse fresh and frozen ingredients before getting creative in the kitchen. Smooth door opening is facilitated by a simple fixed or sliding hinge. Equally if you want to place a fridge in the kitchen and a freezer in the utility room, our appliances can be installed in a way which suits you.

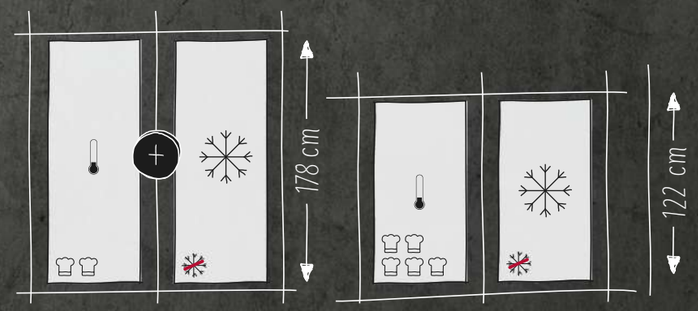

A STYLE FOR ALL FOOD LOVERS

Leading the way in food storage to ensure the freshest and tastiest food

Fresh, seasonal ingredients are a staple in any NEFF kitchen. That's why the right food storage is so important: all our models – whether it's a large American-style fridge freezer that can cope with the demands of a hungry family, or a side-by-side fridge freezer that integrates seamlessly into the kitchen furniture – give you the flexibility to keep your fruit, vegetables and herbs crisp and vibrant for longer.

BUILT-IN FRIDGE/FREEZER

Designed to fit in a single housing unit, our range of fridge freezers include models from the tall larder style to more compact styles. All of our fridge freezers have a 4 star rating.

KI6873FE0G
Built-in fridge freezer N 70

AMERICAN-STYLE FRIDGE FREEZER

It's big, bold, and there's enough space for even the largest family's chilled and frozen food. You'll also find an ice and water dispenser to keep you cool all year round.

KA3923IE0G
American-style fridge freezer N 70

BUILT-UNDER FRIDGE AND FREEZER

Our integrated fridge with a four star freezer fits neatly under the work surface and provides a compact, flexible cooling solution for busy kitchens.

K4336XFF0G
Built-under single door fridge N 50

ADVANTAGES OF DIFFERENT HINGE TYPES

FIXED HINGE

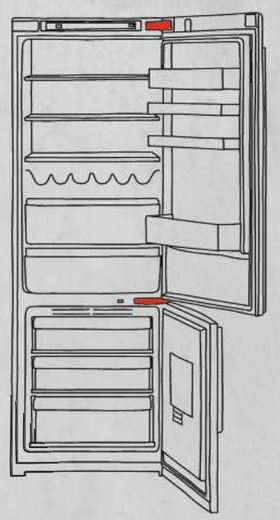

A fixed hinge offers you additional capacity in the refrigerator, leaving you more room for your food

SLIDING HINGE

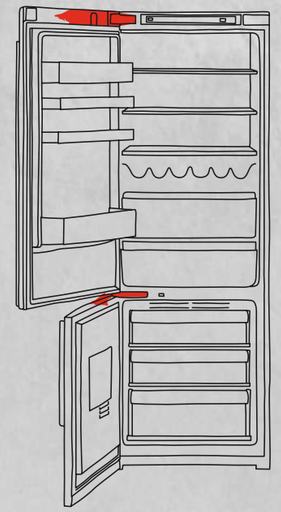

Additional space is required on the inner side of the cabinet to make way for the door hinge.

HINGES TO SUIT ALL KITCHEN DESIGNS

Our doors can be right-hinged or left-hinged in order to suit your kitchen design.

FIXED HINGE AND SOFT CLOSE HINGE

The benefit of this type of hinge is that it carries more weight – ideal for kitchen cabinetry made from heavier hard wood. This hinge also allows the door to open at a wider angle, making the fridge cavity easily accessible. All NEFF doors close automatically when at an angle of approximately 15-20° and selected models have the benefit of Soft Close.

SLIDING HINGE

Our sliding hinge feature sits between the appliance and the furniture door and is secured by a series of brackets. As you open the furniture door, the appliance door is also opened via the sliding bracket design.

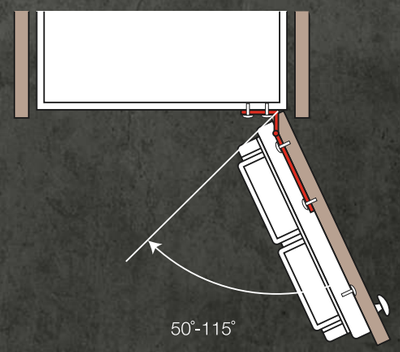

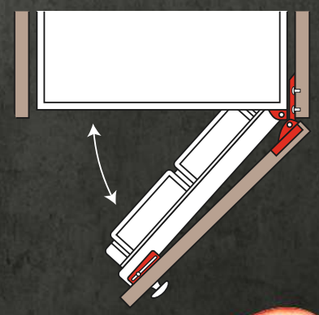

COOLING EXPLAINED

Food preservation features, functions and design explained

Cooking is all about new ideas and fresh inspiration – and our cooling appliances are no different. They are bursting with innovative features and functions to optimally store the food you love.

DESIGN FEATURES

UNIQUE TO NEFF, MAKING YOUR LIFE EVEN EASIER

Easy Clean Magnetic Door Seals
The magnetic door seals on all of our refrigeration range are removable, making them easy to clean and/or replace if necessary.

Find out more information on cooling features and installation solutions at **neff-home.com/uk/**

Wire Shelf
Completely unique to NEFF, our new Wire Shelf feature is ideal for securely storing jars and bottles stacked on their side.

Soft Close
With Soft Close, the fridge door closes automatically when open at an angle of 20° or less. With a soft closing mechanism, it's the ideal addition to kitchens with soft close cabinets.

Easy Lift Door Storage
Easily adjust door storage with just one hand. Combined with Easy Lift Shelves, your fridge space won't restrict your favourite foods and drink.

Anti-spill Trims
Effectively hold up to a pint of liquid in case of accidental spillage. Food is protected below and the clean-up process is a little less messy.

Bottle Rack
Always have a chilled bottle on standby for those impromptu get-togethers.

Easy Lift Shelf
With Easy Lift shelving, it's possible to adjust shelves with just one hand – even when they're fully loaded. Perfect when unloading shopping or introducing freshly prepared dishes to the fridge.

Easy Access Shelf
The retractable glass shelf allows for easy loading and unloading as well as better access to your food. Ideal for putting the finishing touches to those delicate desserts.

Vario Shelf
Designed to offer complete flexibility in your fridge, sectioned glass shelves can simply be separated and slid underneath when not in use. Ideal for larger dishes, with space left over for a convenient condiments storage area at the back.

OTHER FEATURES & FUNCTIONS

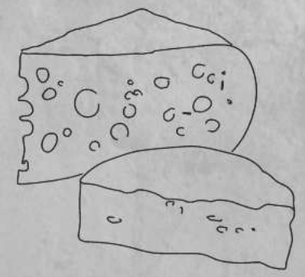

Multiple Cooling Systems
Separate cooling circuits for independent temperature control, to prevent the transference of odours and/or humidity between the fridge and freezer cavities.

Multi Air Flow Cooling
Greatly improves the circulation of air around the fridge, regulating the temperature and humidity levels and eradicating condensation build up, so that your food stays fresher for longer.

No Frost
No Frost freezers automatically react to any signs of frost so it never has a chance to build up. With a No Frost freezer air is blown from the back wall and circulates over food items. As a result, there is no condensation or build up of frost and food does not freeze together.

Low Frost
Low Frost, within our built in bottom freezers KI6873F30G and KI6863F30G, improves performance and reduces frost build up in an energy efficient way. It also provides more storage space due to there being no internal evaporator and you may only need to defrost your freezer every 2-3 years

Super Freeze
Lowers the temperature for rapid freezing when adding fresh food.

Intelligent Cooling
Uses a range of innovative sensors to calculate the quantity of food in the fridge with the outside temperature. The fridge then adjusts the internal cooling power accordingly.

Super Cool
Allows for the increase in temperature that occurs when fresh food is added. As soon as the food is cold, the fridge will readjust to the normal temperature.

Door Open
Door Open and high temperature alarm systems alert you if the door has been left open or a power cut has occurred. Ideal for mitigating food wastage.

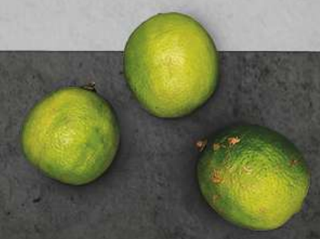

We are at the forefront of refrigeration technology – all fridges and freezers come with at least an A+ rating.

Many of our fridges can achieve the same storage temperatures as the local supermarket, allowing fresh fruit and vegetables to be kept at peak freshness for longer. Did you know that a ten year old fridge accounts for up to a quarter of household energy bills? By consciously choosing to replace appliances early on, huge savings can be made.

A NEFF A+++ FRIDGE USES UP TO 60% LESS ELECTRICITY

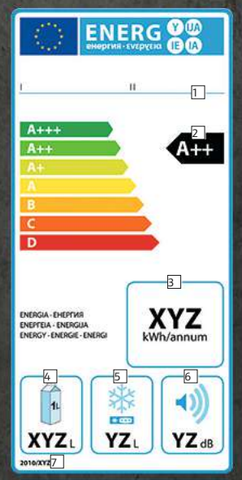

THE FRIDGE & FREEZER ENERGY EFFICIENCY LABEL

1 Supplier's name or trademark and model identifier.
2 Energy efficiency class.
3 Annual energy consumption in kWh (based on standard test results). The actual energy consumption depends on the use of the appliance.
4 Sum of storage volume of all cooling storage compartments (compartments without a star rating).
5 Sum of storage volume of all frozen food storage compartments (compartments with a star rating).
6 Noise emissions in decibels.
7 Numbering of the regulation.

STORING FOOD IN A COOLING APPLIANCE

Fresh, seasonal ingredients are a staple in any kitchen.

As a result, we've developed a range of preservation systems to help your food stay at its best for as long as possible. Using our FreshSafe humidity control drawers, herbs, fruits and vegetables stay crisp, vibrant and fresher for longer.

OUR INNOVATIVE 0°C FRESH SAFE PRESERVATION SYSTEM EXTENDS THE LIFE OF FOOD TIMES TO REDUCE WASTE.

MODELS WITH 0°C FRESH SAFE

KA3923IE0G USA style SBS
KI8413D30G Fridge
KI8865DE0 N90 fridge-freezer

FreshSafe

FreshSafe provides the perfect solution for weekly grocery shoppers. Preserving food to stay fresher for longer as a conventional salad drawer, market-fresh ingredients stay fresh and vibrant for longer.

0°C FreshSafe 3

Offering our optimal preservation system 0°C FreshSafe features two humidity zones to keep food fresher for longer. Perfect for delicate fruits and herbs such as berries, avocados and leafy greens, your favourite fruits and vegetables are kept beautifully plump and vibrant. Suitable for fish and meat, our innovative cooling solutions are designed for everything you like to cook.

FreshSafe 2

Preserving food for longer, FreshSafe is designed with busy family life in mind. Nutritious fruit and vegetables are always at hand and vibrancy and texture is maintained.

FreshSafe 1

Designed to keep salad items, leafy herbs and fruit at their peak for longer, our convenient vegetable drawer helps to extend the life of your favourite greens.

Fruit and vegetables stay fresher for longer in a FreshSafe compartment, compared to a salad drawer in a conventional fridge, and preserve up to 50% more vitamins.

Please note the change in terminology for our preservations storage, VitaFresh® is now 0°C FreshSafe3, HydroFresh is now FreshSafe2, Crisper Box is now FreshSafe1. *www.lovefoodhatewaste.com

WE'RE COMMITTED TO REDUCING FOOD WASTAGE

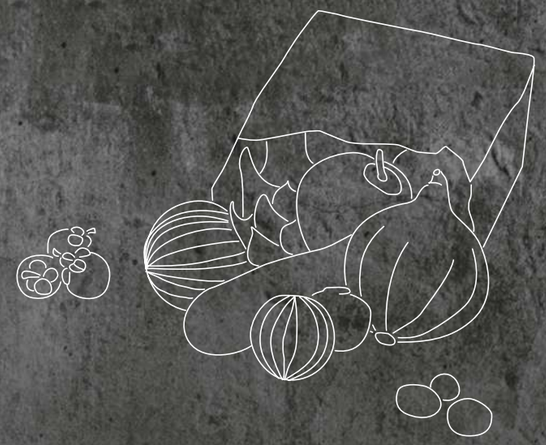

Did you know that around a third of the food we buy is thrown away?

The average family of four throws away £680 worth of food per year. At NEFF, we're keen to help you manage your costs by developing the most effective food preservation systems. FreshSafe is a 0°C compartment, independent from the fridge temperature, comprising two humidity zones. The dry section maintains 50% humidity to preserve meat and fish, while the moist zone, at 90% humidity, extends the life of vegetables, salad and fruit.

FreshSense

Uses intelligent sensors to monitor the temperature within the fridge, the freezer and the room outside. This feature ensures that the appliance maintains an optimal storage climate independent of the surrounding ambient temperatures.

WE THROW AWAY 7 MILLION TONNES OF FOOD AND DRINK FROM OUR HOMES EVERY YEAR*. AT NEFF WE'RE COMMITTED TO HELPING YOU REDUCE WASTAGE AND EFFECTIVELY MANAGE YOUR GROCERY COSTS.

EASY ACCESS TO YOUR FRESH INGREDIENTS

Access to the fresh safe drawers is easy. The telescopic FlexiRail® system allows the drawers to slide out fully for added convenience.

WITH INNOVATIONS IN FOOD PRESERVATION, NEFF FRIDGES KEEP YOUR FAVOURITE INGREDIENTS AT THEIR BEST FOR LONGER.

AMERICAN-STYLE FRIDGE FREEZERS

Big and bold

Supersized for family-life, our American-style fridge freezer truly has a place for everything. With storage solutions to keep your fruit and vegetables fresh, freezer compartments for large joints of meat, and enough door trays for those everyday favourites, our American design is perfect for British kitchens. Featuring a water and ice dispenser, plumb your fridge into the mains for ice cold drinks on tap.

Discontinued September 2020.

KA3923IE0G
American-Style Fridge Freezer **N 70**

FreshSafe drawers on rails

DESIGN/PERFORMANCE

Energy A++ | Height (cm) 178 | Total Capacity 533 | Electronic Control | Noise Level 42 dB

COLLECTION	N 70	N 50
MODEL NO.	KA3923IE0G	KA3902B20G
DESIGN FEATURES		
Colour of door panels	Stainless steel anti fingerprint	Black
Colour of sides	Grey	Black
Style of handle	Vertical bar handle	Vertical bar handle
Colour of handle	Stainless steel	Aluminium
No Frost in fridge and freezer	●	●
Home Connect, WI-FI dongle included		
FOOD FRESHNESS SYSTEM		
FreshSafe	2 x FreshSafe drawers on rails	2 x FreshSafe drawers on rails
KEY FEATURES – FRIDGE SECTION		
Product highlights	LED	LED
Super Cool	●	●
Type of control	Electronic	Electronic
Number of shelves	5	4
Number of adjustable shelves		
Bottle shelves in fridge	●	
Number of door bins / shelves	5	5
Temperature display	Digital	Digital
Warning signal door open	●	●
KEY FEATURES – FREEZER SECTION		
Door opened indicator	●	●
Super Freeze function	●	●
Temperature adjustable in freezer	●	●
Number of ice cube trays	Automatic ice cube maker	Automatic ice cube maker
Ice dispenser features	Crushed ice, Ice cubes, Water, Water filter	Crushed ice, Ice cubes, Water, Water filter
Number of freezer drawers	2	2
ADDITIONAL INFORMATION		
Energy efficiency class	A++	A+
Energy consumption[1] kWh/annum	343	436
Total net capacity L	533	533
Refrigerator net capacity L	368	370
Freezer net capacity L	165	163
Climate class[2]	SN-T	SN-T
Noise level (dB(A) re 1 pW)	43	43
Additional accessories included	1 x connection hose, 1 x egg tray	1 x connection hose, 1 x egg tray
Height of product mm	1787	1770
Width of product mm	908	910
Depth of product mm	707	720

AMERICAN-INSPIRED DESIGN FOR NEFF-INSPIRED KITCHENS

1.Actual energy consumption will depend on how the appliance is used and where it is located.
2.Climate zone SN = designed to operate in ambient temperature of +10°C to 32°C.
Climate zone T = designed to operate in ambient temperature of +18°C to 43°C.

BUILT-IN FRIDGE FREEZERS

With an energy efficiency rating of A++ and state of the art food preservation technology, our built-in fridge freezer range offers the ideal solution for busy families and passionate cooks. Innovative refrigeration features include Home Connect available within the N90 Collection along with Telescopic Flexi Rail Drawers for easy access, Fresh Safe humidity controlled zones and efficient LED interior lighting. With No Frost, Low Frost or manual defrost freezers available in the range, the freezer compartment delivers on intelligent features too.

KI8865DE0
Built-in Fridge Freezer — N 90

DESIGN/PERFORMANCE

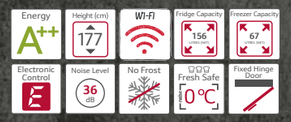

KI7863DF0G
Built-in Fridge Freezer — N 70

DESIGN/PERFORMANCE

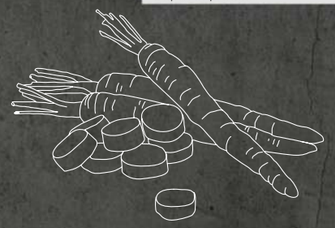

FLEXIBLE STORAGE FRIDGE FREEZER

177CM HIGH

COLLECTION							
	KI8865D30 replaced by KI8865DE0 September 2020.	KI7863D30G replaced by KI7863DF0G September 2020.	KI7853D30G replaced by KI7853DE0G September 2020.	KI7862F30G replaced by KI7862FF0G September 2020.		KI6873F30G replaced by KI8673FE0G September 2020.	KI6863F30G replaced by KI6863FE0G September 2020.
	N 90	N 70	N 70	N 50	N 50	N 70	N 70
MODEL NO.	KI8865DE0	KI7863DF0G	KI7853DE0G	KI7862FF0G	KI7862SF0G	KI6873FE0G	KI6863FE0G
DESIGN FEATURES							
Fridge / Freezer split	60/40	60/40	50/50	60/40	60/40	70/30	60/40
No Frost	●	●	●	●	●		
Low Frost or Manual defrost						Low Frost	Low Frost
Soft Close hinge	●	●	●				
Type of hinge (reversible)	Fixed hinge	Fixed hinge	Fixed hinge	Fixed hinge	Sliding hinge	Fixed hinge	Fixed hinge
Home Connect	●						
FOOD FRESHNESS SYSTEM							
FreshSafe	2 x FreshSafe 3 0°C drawers	1 x FreshSafe 2 drawer	1 x FreshSafe 2 drawer	1 x FreshSafe drawer	1 x FreshSafe drawer	1 x FreshSafe 2 drawer	1 x FreshSafe 2 drawer
KEY FEATURES – FRIDGE SECTION							
Light	LED	LED	LED	LED	LED	LED	LED
Super Cool function	●	●	●			●	●
Type of control	Electronic	Electronic	Electronic	Electronic	Electronic	Electronic	Electronic
Number of shelves	3	5	4	4	4	5	4
Number of adjustable shelves	2	4	3	3	3	4	4
Number of door bins / shelves	2	5	3	4	4	5	5
Type of shelves	Safety glass	Safety glass	Safety glass	Safety glass	Safety glass	Safety glass	Safety glass
Temperature display	Digital 7 segment	Digital 7 segment	Digital 7 segment	Digital 7 segment	Digital 7 segment	Digital 7 segment	Digital 7 segment
Warning signal door open	●	●	●	●	●	●	●
Bottle shelves in fridge	●	●	●			●	●
KEY FEATURES – FREEZER SECTION							
Door opened indicator	●	●	●			●	●
Super Freeze function	●	●	●	●	●	●	●
Temperature adjustable in freezer	●	●	●			●	●
Number of ice cube trays	1	1	1	1	1	1	1
Number of freezer drawers	3	3	4	3	3	2	3
ADDITIONAL INFORMATION							
Energy efficiency class	A++	A++	A++	A++	A++	A++	A++
Energy consumption[1] kWh/annum	232	221	232	222	222	225	218
Total net capacity L	223	255	246	255	255	270	265
Refrigerator net capacity 4°C - 8°C L	101	188	154	188	188	209	191
Refrigerator net capacity 0°C L	55						
Freezer net capacity L	67	67	92	67	67	61	74
Climate class[2]	SN-ST	SN-ST	SN-ST	SN-ST	SN-ST	SN-T	SN-ST
Noise level (dB(A) re 1 pW)	36 dB	39 dB	39 dB	39 dB	39 dB	36 dB	36 dB
Additional accessories included	2 x egg tray, 1 x ice cube tray, 1 x bottle holder in door tray	2 x ice packs, 2 x egg tray, 1 x ice cube tray	2 x egg tray, 1 x ice cube tray, 1 x bottle holder in door tray	2 x egg tray, 1 x ice cube tray	2 x egg tray, 1 x ice cube tray	2 x egg tray, 1 x ice cube tray, 1 x bottle holder in door tray	2 x egg tray, 1 x ice cube tray, 1 x bottle holder in door tray
Height of product mm	1772	1772	1772	1772	1772	1772	1772
Width of product mm	558	558	558	541	541	558	558
Depth of product mm	545	545	545	545	545	545	545
	Split 60/40	Split 60/40	Split 50/50	Split 60/40	Split 60/40	Split 70/30	Split 60/40

1.Actual energy consumption will depend on how the appliance is used and where it is located.
2.Climate zone SN = designed to operate in ambient temperature of +10°C to 32°C.
Climate zone T = designed to operate in ambient temperature of +18°C to 43°C.

BUILT-IN FRIDGE FREEZERS

Our built-in fridge freezers offer flexibility and plenty of storage space, so you can easily browse fresh and frozen ingredients before getting creative in the kitchen. If family life makes ample freezer space essential, a 50/50 split fridge freezer provides the perfect solution.

KI5872FF0G
Built-In Fridge Freezer **N 50**

DESIGN / PERFORMANCE

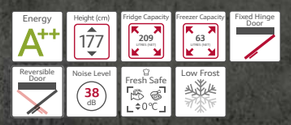

ULTIMATE FRIDGE FREEZER FLEXIBILITY

177CM HIGH

	KI5872F30G replaced by KI5872FF0G October 2020.	KI5872S30G replaced by KI5872SF0G October 2020.		KI5862S30G replaced by KI5862SF0G October 2020.		Available December 2020.	
COLLECTION	N 50	N 50	N 50	N 50	N 50	N 30	N 30
MODEL NO.	KI5872FF0G	KI5872SF0G	KI5852FF0G	KI5862SF0G	KI5852SF0G	KI5871SF0G	K8524X8GB
DESIGN FEATURES							
Fridge / Freezer split	70/30	70/30	50/50	60/40	50/50	70/30	70/30
No Frost							
Low Frost or Manual defrost	Low Frost	Low Frost	Low Frost	Low Frost	Low Frost	Low Frost	Manual
Soft Close hinge							
Type of hinge (reversible)	Fixed hinge	Sliding hinge	Fixed hinge	Sliding hinge	Sliding hinge	Sliding hinge	Sliding hinge
Home Connect							
FOOD FRESHNESS SYSTEM							
FreshSafe	1 x FreshSafe drawer	1 x FreshSafe drawer	1 x FreshSafe drawer	1 x FreshSafe drawer	1 x FreshSafe drawer	1 x FreshSafe drawer	1 x Vegetable drawer
KEY FEATURES – FRIDGE SECTION							
Light	LED	LED	LED	LED	LED	LED	1 x 25 Watt
Super Cool function							
Type of control	Electronic	Electronic	Electronic	Electronic	Electronic	Electronic	Mechanical
Number of shelves	5	5	4	4	4	5	5
Number of adjustable shelves	4	4	3	3	3	4	4
Number of door bins / shelves	5	5	4	4	4	4	5
Type of shelves	Safety glass	Safety glass	Safety glass	Safety glass	Safety glass	Safety glass	Safety glass
Temperature display	Digital LED	Digital LED	Digital LED	Digital LED	Digital LED	Digital LED	
Warning signal door open							
Bottle shelves in fridge							3-wave bottle holder
KEY FEATURES – FREEZER SECTION							
Door opened indicator							
Super Freeze function	●	●	●	●	●	●	
Temperature adjustable in freezer							
Number of ice cube trays	1	1	1	1	1	1	
Number of freezer drawers	2	2	4	3	4	2	3
ADDITIONAL INFORMATION							
Energy efficiency class	A++	A++	A++	A++	A++	A+	A+
Energy consumption[1] kWh/annum	227	227	239	231	239	274	276
Total net capacity L	272	272	259	267	259	271	276
Refrigerator net capacity 4°C - 8°C L	209	209	157	191	157	201	217
Refrigerator net capacity 0°C L							
Freezer net capacity L	63	63	102	76	102	70	59
Climate class[2]	SN-T	SN-T	SN-T	SN-T	SN-T	SN-ST	SN-ST
Noise level (dB(A) re 1 pW)	38 dB	38 dB	38 dB	38 dB	38 dB	39 dB	40 dB
Additional accessories included	2 x egg tray, 1 x ice cube tray	2 x egg tray, 1 x ice cube tray	2 x egg tray, 1 x ice cube tray	2 x egg tray, 1 x ice cube tray	2 x egg tray, 1 x ice cube tray	2 x egg tray, 1 x ice cube tray	1 x butter dish
Height of product mm	1772	1772	1772	1772	1772	1772	1772
Width of product mm	541	541	541	541	541	541	541
Depth of product mm	545	545	545	545	545	545	545
	Split 70/30	Split 70/30	Split 50/50	Split 60/40	Split 50/50	Split 70/30	Split 70/30

1.Actual energy consumption will depend on how the appliance is used and where it is located.
2.Climate zone SN = designed to operate in ambient temperature of +10°C to 32°C.
Climate zone T = designed to operate in ambient temperature of +18°C to 43°C.

BUILT-IN SINGLE DOOR FRIDGES & FREEZERS

177cm high – A spacious integrated solution

Designed to seamlessly fit around your kitchen design, our built-in solutions allow you to create a sleek integrated effect without compromising on valuable refrigeration space. Featuring Fresh Sense constant temperature control, an automatic defrost fridge and an A++ energy rating, our 177cm fridges & freezers are designed to save time and energy while providing the optimum environment for fresh meats, dairy produce and vegetables.

PERFECT FOR SIDE-BY-SIDE COMBINATIONS

KI8816DE0
Built-in Single Door Fridge **N 90**

GI7813EF0G
Built-in Single Door Freezer **N 90**

DESIGN/PERFORMANCE

DESIGN/PERFORMANCE

177CM HIGH

COLLECTION	N 90	N 70	N 70	N 50	N 50	N 90	N 90
MODEL NO.	KI8816DE0	KI2823FF0G	KI1813FE0G	KI2822SF0G	KI1812SF0G	GI7815CE0G	GI7813EF0G
	KI8816D30 replaced by KI8816DE0 September 2020.	KI2823F30G replaced by KI2823FF0G September 2020.		KI2822S30G replaced by KI2822SF0G September 2020.		Available December 2020.	KI1812S30G replaced by KI1812SF0G September 2020.
DESIGN FEATURES							
No Frost						●	●
Low Frost or Manual defrost							
Soft Close hinge	●					●	
Type of hinge (reversible)	Fixed hinge	Fixed hinge	Fixed hinge	Sliding hinge	Sliding hinge	Fixed hinge	Fixed hinge
Home Connect						●	
FOOD FRESHNESS SYSTEM							
FreshSafe	3 x FreshSafe 3 0°C drawers	1 x FreshSafe 2 drawer on telescopic rails, 1 x FreshSafe drawer on telescopic rails	1 x FreshSafe 2 drawer on telescopic rails, 1 x FreshSafe drawer on telescopic rails	2 x FreshSafe drawers	2 x FreshSafe drawers		
KEY FEATURES – FRIDGE SECTION							
Light	LED	LED	LED	LED	LED		
Super Cool function	●	●	●	●	●		
Type of control	Electronic	Electronic	Electronic	Electronic	Electronic		
Number of shelves	7	5	7	5	7		
Number of adjustable shelves	6	4	6	4	6		
Number of door bins / shelves	5	5	6	5	6		
Type of shelves	Safety glass	Safety glass	Safety glass	Safety glass	Safety glass		
Temperature display	Digital 7 segment	Digital 7 segment	Digital 7 segment	Digital LED	Digital LED		
Warning signal door open	●	●	●				
Defrost system in fridge	Automatic	Automatic	Automatic	Automatic	Automatic		
Bottle shelves in fridge	●	●	●				
KEY FEATURES – FREEZER SECTION							
Light in freezer							
Door opened indicator						●	●
Super Freeze function						●	●
Temperature adjustable in freezer						●	●
Number of ice cube trays		1		1		1	1
Number of freezing flaps		1		1		2	2
Number of freezer drawers						5	5
ADDITIONAL INFORMATION							
Energy efficiency class	A++	A++	A++	A++	A++	A++	A++
Energy consumption[1] kWh/annum	132	209	116	209	116	243	243
Total net capacity including 0°C drawers L	289	286	319	286	319	211	211
Refrigerator net capacity 0°C L	83						
Freezer net capacity L		34		34		211	211
Climate class[2]	SN-T	SN-ST	SN-T	SN-ST	SN-T	SN-T	SN-T
Noise level (dB(A) re 1 pW)	37 dB	36 dB	37 dB	39 dB	37 dB	42 dB	36 dB
Additional accessories included	2 x egg tray, 1 x bottle holder in door tray	2 x egg tray, 1 x ice cube tray	2 x egg tray	2 x egg tray, 1 x ice cube tray	2 x egg tray	1 x ice cube tray	1 x ice cube tray
Height of product mm	1772	1772	1772	1772	1772	1772	1772
Width of product mm	558	558	558	541	541	558	558
Depth of product mm	545	545	545	545	545	545	545

1. Actual energy consumption will depend on how the appliance is used and where it is located.
2. Climate zone SN = designed to operate in ambient temperature of +10°C to 32°C.
Climate zone T = designed to operate in ambient temperature of +18°C to 43°C.

FOR MORE INFORMATION PLEASE VISIT NEFF-HOME.COM/UK

BUILT-IN SINGLE DOOR FRIDGES AND FREEZERS

Plenty of space for family life

Slightly smaller in size, our 140cm and 122cm models are popular with busy family kitchens, offering plenty of storage space. These fridge & freezers more than make up for the less storage space with a range of innovative features to maximize shelf space. With Vario Shelf allowing for taller items and a generous FreshSafe humidity controlled compartment, there's plenty of room for your favourite food and drinks.

KI1513FF0
Built-in Single Door Fridge **N 70**

KI1413DD0
Built-in Single Door Fridge **N 70**

FreshSafe 2

DESIGN/PERFORMANCE

DESIGN/PERFORMANCE

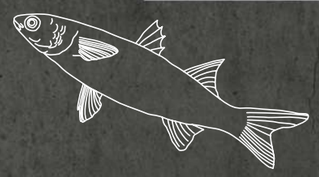

COLLECTION					
MODEL NO.		N 70	N 70	N 70	N 70	N 30
		KI1513FF0	KI1413DD0	KI1413FF0	GI7416CE0	K1544XSF0
		KI1513F30G replaced by KI1513FF0 September 2020.	Available October 2020.	KI1413F30G replaced by KI1413FF0 September 2020.	Available September 2020.	Available September 2020.
DESIGN FEATURES						
No Frost					●	
Low Frost or Manual defrost						
Soft Close hinge			●		●	
Type of hinge (reversible)		Fixed hinge	Fixed hinge	Fixed hinge	Fixed hinge	Sliding hinge
Home Connect						
FOOD FRESHNESS SYSTEM						
FreshSafe		1 x FreshSafe 2 drawer	1 x FreshSafe 2 drawer	1 x FreshSafe 2 drawer		1 x Vegetable drawer
KEY FEATURES – FRIDGE SECTION						
Light		LED	LED	LED		1 x 25 Watt
Super Cool function		●	●	●		
Type of control		Electronic	Electronic	Electronic		Mechanical
Number of shelves		6	6	6		6
Number of adjustable shelves		5	5	5		5
Number of door bins / shelves		5	4	4		4
Type of shelves		Safety glass	Safety glass	Safety glass		Safety glass
Temperature display		Digital 7 segment	Digital 7 segment	Digital 7 segment		
Warning signal door open		●	●	●		
Defrost system in fridge		Automatic	Automatic	Automatic		Automatic
Bottle shelves in fridge		●	●	●		
KEY FEATURES – FREEZER SECTION						
Light in freezer						
Door opened indicator					●	
Super Freeze function					●	
Temperature adjustable in freezer					●	
Number of ice cube trays					1	
Number of freezing flaps						
Number of freezer drawers					5	
ADDITIONAL INFORMATION						
Energy efficiency class		A++	A+++	A++	A++	A++
Energy consumption[1]	kWh/annum	109	69	105	188	103
Total net capacity including 0°C drawers	L	247	211	211	127	221
Refrigerator net capacity 0°C	L					
Freezer net capacity	L				127	
Climate class[2]		SN-T	SN-T	SN-T	SN-T	SN-ST
Noise level (dB(A) re 1 pW)		33 dB	34 dB	33 dB	36 dB	37 dB
Additional accessories included		2 x egg tray	2 x egg tray	2 x egg tray	1 x ice cube tray	1 x egg tray
Height of product	mm	1397	1221	1221	1221	1221
Width of product	mm	558	558	558	558	541
Depth of product	mm	545	545	545	545	542

SEAMLESS AND MODERN DESIGN

140CM HIGH

122CM HIGH

1.Actual energy consumption will depend on how the appliance is used and where it is located.
2.Climate zone SN = designed to operate in ambient temperature of +10°C to 32°C.
Climate zone T = designed to operate in ambient temperature of +18°C to 43°C.

BUILT-IN SINGLE DOOR FRIDGES AND FREEZERS

A smaller size shouldn't mean less functionality and our 102cm and 87cm fridge & freezers delivery a range of innovative NEFF features. With a FreshSafe humidity-controlled drawer, FreshSense constant temperature control and Super Cool technology, the right temperature and conditions are always maintained.

KI536XFF0
Built-in Single Door Fridge **N 30**

DESIGN/PERFORMANCE

GI624SE0G
Built-in Single Door Freezer **N 50**

DESIGN/PERFORMANCE

102CM HIGH

87CM HIGH

COLLECTION		N 30	N 70	N 70	N 30	N 50
MODEL NO.		KI536XFF0	KI1213F30G	KI1213DD0	KI514XF0G	GI1216DE0
		Available October 2020.	Discontinued November 2020.	Available September 2020.	KI514X7GB replaced by KI514XF0G September 2020.	
No Frost						
Low Frost or Manual defrost						Low Frost
Soft Close hinge				●		
Type of hinge (reversible)		Fixed hinge	Fixed hinge	Fixed hinge	Sliding hinge	Fixed hinge
Home Connect						
FOOD FRESHNESS SYSTEM						
FreshSafe		1 x Vegetable drawer	1 x FreshSafe 2 drawer	1 x FreshSafe 2 drawer	1 x Vegetable drawer	
KEY FEATURES – FRIDGE SECTION						
Light		1 x 25 Watt	LED	LED	1 x 25 Watt	
Super Cool function			●	●		
Type of control		Mechanical	Electronic	Electronic	Mechanical	
Number of shelves		5	4	4	4	
Number of adjustable shelves		4	3	3	3	
Number of door bins / shelves		4	3	3	4	
Type of shelves		Safety glass	Safety glass	Safety glass	Safety glass	
Temperature display			Digital 7 segment	Digital 7 segment		
Warning signal door open			●	●		
Defrost system in fridge		Automatic	Automatic	Automatic	Automatic	
Bottle shelves in fridge				●		
KEY FEATURES – FREEZER SECTION						
Light in freezer						
Door opened indicator						●
Super Freeze function						●
Temperature adjustable in freezer						●
Number of ice cube trays						1
Number of freezing flaps						
Number of freezer drawers						3
ADDITIONAL INFORMATION						
Energy efficiency class		A++	A++	A+++	A++	A++
Energy consumption[1]	kWh/annum	99	97	65	122	157
Total net capacity including 0°C drawers	L	181	144	144	150	97
Refrigerator net capacity 0°C	L					
Freezer net capacity	L					97
Climate class[2]		SN-ST	SN-T	SN-T	SN-ST	SN-T
Noise level (dB(A) re 1 pW)		37 dB	33 dB	33 dB	34 dB	36 dB
Additional accessories included		1 x egg tray	2 x egg tray	2 x egg tray	1 x butter dish	1 x ice cube tray
Height of product	mm	1021	874	874	874	874
Width of product	mm	541	558	558	541	558
Depth of product	mm	542	545	545	542	545

COLLECTION		N 30	N 50
MODEL NO.		GI624SE0G	GI1113FE0
DESIGN FEATURES			
No Frost			
Low Frost or Manual defrost		Manual	Low Frost
Soft Close hinge			
Type of hinge (reversible)		Sliding hinge	Fixed hinge
Key features – Freezer section			
Light in freezer			
Door opened indicator		●	●
Super Freeze function		●	●
Temperature adjustable in freezer		●	●
Number of ice cube trays		1	1
Number of freezing flaps			
Number of freezer drawers		4	3
ADDITIONAL INFORMATION			
Energy efficiency class		A+	A++
Energy consumption[1]	kWh/annum	192	144
Total net capacity including 0°C drawers	L	94	72
Refrigerator net capacity 0°C	L		
Freezer net capacity	L	94	72
Climate class[2]		SN-T	SN-T
Noise level (dB(A) re 1 pW)		38 dB	36 dB
Additional accessories included		1 x berry tray, 1 x ice cube tray	1 x ice cube tray
Height of product	mm	874	712
Width of product	mm	541	558
Depth of product	mm	542	560

87CM HIGH

GI524X7GB replaced by GI624SE0G September 2020.

71CM HIGH

GI1113F30 replaced by GI1113FE0 September 2020.

1.Actual energy consumption will depend on how the appliance is used and where it is located.
2.Climate zone SN = designed to operate in ambient temperature of +10°C to 32°C.
Climate zone T = designed to operate in ambient temperature of +18°C to 43°C.

BUILT-UNDER SINGLE DOOR FRIDGES & FREEZER

Create your own cooling solution

DESIGNED TO BE BUILT UNDER THE WORKTOP, OUR SINGLE DOOR FRIDGE AND FREEZER OFFER THE IDEAL COOLING SOLUTION FOR BUSY FAMILY KITCHENS.

K4336XFF0G
Built-under Single Door Fridge **N 50**

K4316XFF0G
Built-under Single Door Fridge **N 50**

PERFECT UNDER-COUNTER COOLING SOLUTION

82CM HIGH

82CM HIGH

Reversible door

DESIGN/PERFORMANCE

Energy A++ | Height (cm) 82 | Total Capacity 123 | Fixed Hinge Door | Reversible Door | Noise Level 38 dB

DESIGN/PERFORMANCE

Energy A++ | Height (cm) 82 | Total Capacity 137 | Fixed Hinge Door | Reversible Door | Noise Level 37 dB

G4344XFF0G
Built-under Single Door Freezer **N 50**

82CM HIGH

Reversible Door

Low Frost

DESIGN/PERFORMANCE

Energy A+ | Height (cm) 82 | Total Capacity 98 | Fixed Hinge Door | Reversible Door | Noise Level 38 dB

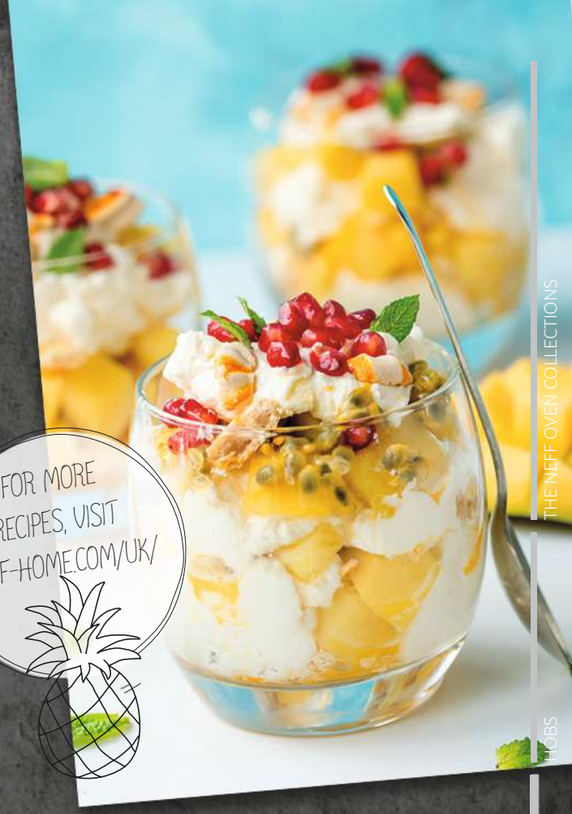

FOR MORE RECIPES, VISIT NEFF-HOME.COM/UK/

K4336X8GB replaced by K4336XFF0G September 2020.

COLLECTION		N 50	N 50	N 50
MODEL NO.		K4336XFF0G	K4316XFF0G	G4344XFF0G
No Frost				
Low Frost or Manual defrost				Manual
Soft Close hinge				
Type of hinge (reversible)		Fixed hinge	Fixed hinge	Fixed hinge
Home Connect				
FOOD FRESHNESS SYSTEM				
FreshSafe		2 x FreshSafe drawers	2 x FreshSafe drawers	
KEY FEATURES – FRIDGE SECTION				
Light		1 x 25 Watt	1 x 25 Watt	
Super Cool				
Type of control		Mechanical	Mechanical	
Number of shelves		2	3	
Number of adjustable shelves		1	2	
Number of door bins / shelves		3	3	
Type of shelves		Safety glass	Safety glass	
Temperature display				
Warning signal door open				
Defrost system in fridge		Automatic	Automatic	
Bottle shelves in frdge				
KEY FEATURES – FREEZER SECTION				
Light in freezer				
Door opened indicator				●
Super Freeze function		●		●
Temperature adjustable in freezer				●
Number of ice cube trays		1		1
Number of freezing flaps		1		
Number of freezer drawers				3
ADDITIONAL INFORMATION				
Energy efficiency class		A++	A++	A+
Energy consumption	kWh/annum	140	92	184
Total net capacity including 0°C drawers	L	123	137	98
Refrigerator net capacity 0°C	L			
Freezer net capacity	L	15		98
Climate class		SN-ST	SN-ST	SN-ST
Noise level (dB(A) re 1 pW)		38 dB	38 dB	38 dB
Additional accessories included		1 x butter tray, 1 x egg tray, 1 x ice cube tray	1 x egg tray	1 x ice cube tray
Height of product	mm	820	820	820
Width of product	mm	598	598	598
Depth of product	mm	548	548	548

1. Actual energy consumption will depend on how the appliance is used and where it is located.
2. Climate zone SN = designed to operate in ambient temperature of +10°C to 32°C.
Climate zone T = designed to operate in ambient temperature of +18°C to 43°C.

DISHWASHERS

Clean dishes, whatever your wishes

Baked-on egg or grandma's fine china? We have a programme for every dish, plate and occasion: from Chef 70° for very dirty dishes to Auto, the all-round programme, you can count on glistening results. Not only will it be clean, but dry too: with Zeolith, glass, porcelain and even plastic containers come out drip free.

THE COLLECTION

Choosing the right appliance to complement your kitchen and lifestyle can be challenging. To help you select the perfect kitchen companion, we've introduced easy-to-follow Collections based on product features, technology, design and simplicity. There's a Collection to suit everyone.*

N 90

STYLES OF DISHWASHER

- 60cm Fully Integrated
- 81.5cm Height

Touch Control with TFT display

FEATURES

THIS COLLECTION CAN INCLUDE*:-

- Home Connect
- A+++
- 9.5 Litres water capacity
- Zeolith
- 8 Programmes
- Flex 3 baskets
- Flex drawer 3
- Touch Control with TFT display
- Door Open Assist
- Emotion Light

N 70

STYLES OF DISHWASHER

- 60cm Fully Integrated
- 81.5cm Height

Touch Control with LED display

FEATURES

THIS COLLECTION CAN INCLUDE*:-

- A++
- 6.7 Litre water capacity
- Heat exchanger drying
- Up to 8 Programmes
- Flex 3 baskets
- Flex drawer 3
- Touch Control with LED display
- Door Open Assist
- Emotion Light

N 50

STYLES OF DISHWASHER

- 60cm Fully Integrated
- 45cm Fully Integrated
- 81.5cm and 86.5cm Height

Push Button Control with LED display

FEATURES

THIS COLLECTION CAN INCLUDE*:-

- A++
- 9.5 Litre water
- Heat exchanger drying
- Up to 6 programmes
- Flex 2 baskets with coloured touch points
- Flex Drawer 2
- Push Button Control with LED Display
- Vario Hinge

N 30

STYLES OF DISHWASHER

- 60cm Fully Integrated
- 60cm Semi-integrated
- 81.5cm Height

Push Button Control with LED indicators

FEATURES

THIS COLLECTION CAN INCLUDE*:-

- A+
- Residual Heat Drying
- 5 Programmes
- Flex 1 baskets

*The features included in each collection are an overview only. Please ensure that you check the product detail for exact features of each model.

OUR DISHWASHERS SUIT YOUR COOKING STYLE

FULL SIZE DISHWASHERS

Designed to be as flexible and accommodating as possible, our full-sized dishwashers have adjustable baskets and racks to hold large or awkward items, as well as a choice of wash cycles from intensive to delicate.

SLIMLINE DISHWASHERS

Where space is an issue, our SlimLine model **S875HKX20G** is ideal. Just 45cm wide, it fits into the smallest of spaces, but still offers all the features of a full size model. It is surprisingly roomy and able to cope with nine place settings at a time.

VARIO HINGE MODELS

In addition to the two height sizes (81.5cm and 86.5cm), dishwashers with VarioHinge **S713N60X1G** and **S723N60X1G**, are the perfect solution for installations with limited clearance between the bottom of the door and the plinth. VarioHinge allows the kitchen frontal to slide up the dishwasher door slightly as it lowers, clearing the plinth to give you a flush and sleek look to your kitchen.

FULLY INTEGRATED DISHWASHERS

INVISIBLE TO THE EYE, POWERFUL ON YOUR DISHES

Our fully integrated dishwashers are seamlessly tucked away into your kitchen and offer innovative programmes to take care of all of your cookware. With settings for the most stubborn stains and intelligent care programmes for your most delicate glassware, we've created a cleaning solution for all of your everyday cooking and dining utensils. HygienePlus introduces a final rinse at very high temperatures to fight bacteria – perfect for baby bottles* or chopping boards. You can even fit in bulkier items by folding down unused racks thanks to Flex 3 baskets.

*Please note this program does not sterilise.

SEMI-INTEGRATED DISHWASHERS

SLEEK EFFICIENCY

Providing easy access to a front control panel and tastefully integrating with your furniture, our semi-integrated dishwashers are a popular choice in kitchen design. Simple to use, your pots, pans crockery and glassware come out clean and dry, all just using 9.5L of water

DISHWASHING FLEXIBILITY

The more flex you choose, the better space is used

Whether you have large, sturdy pots or delicate glasses, the Flex 3 basket system adapts to your crockery and utensils. Just push the Touch Points and adjust the basket to your needs.

FLEX BASKETS

Fitting casserole dishes, large pans, full dinner sets and tall-stem wine glasses into a dishwasher can be a challenge – especially when you're cleaning your most robust cookware alongside delicate items. Our Flex Baskets are designed to accommodate those bulkier items and provide an even, thorough clean. We have 3 options of basket flexibility to choose from:

FLEX 1

Flex 1 – Featuring a standard grey plastic fascia with 2 bottom basket flexible areas, Flex 1 is our entry basket flexibility feature

FLEX 2

Flex 2 – Offering attractive brand coloured fascias and touch points, our Flex 2 provides 2 top rack flexible areas for glasses and a further 4 bottom basket flexible zones.

FLEX 3

Flex 3 – Our premium Flex 3 feature boasts a stainless steel fascia, colour touch points along with 6 top rack flexible areas and 8 bottom basket flexible zones. Perfect for those who love to entertain!

Flex 1 Basket

Flex 2 Basket

Flex 3 Basket

The Flex Drawer 3 on the top level holds cutlery, utensils and espresso cups.

FLEX DRAWERS

We have a choice of 2 Flex Drawers to suit any Cookaholic's cutlery, cooking implements and smaller items.

FLEX 2 DRAWER

Flex Drawer2 – Offering a third loading level solution, Flex Drawer 2 frees up space in the bottom basket to secure cutlery more effectively. Tines separate each item preventing different metals from touching and causing rust spots from electrolysis. Cutlery can also dry easier, reducing the potential of water marks.

FLEX 3 DRAWER

Flex Drawer 3 – Featured on our premium models, our Flex Drawer 3 offers a stainless steel fascia panel, flexible sides that can fold down to take items such as espresso cups, flexible tine areas that can be adjusted to take larger handle cutlery along with full depth zones to cater for ladles.

RACK MATIC 5CM

RACK-MATIC

Rack-Matic allows the top basket to be raised or lowered into three different positions. With the option to adjust the basket even when fully loaded, those last minute wine glasses can still go in at the end of the night. The top basket can also run on an angle, using two different heights either side which helps moisture drain away, aiding the drying process.

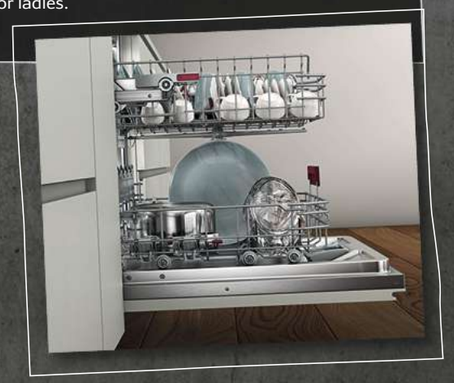

FLOOR PROJECTION DISPLAYS

Let there be light

Knowing when your dishwasher cycle is in action has never been easier, or looked cooler. Clearly lit on the floor of your kitchen, our innovative and stylish floor projection features indicate when the dishwasher is still working hard on your dishes, so you don't have to open and check.

Time Light

TIME LIGHT

Never interrupt a cycle again

Time Light projects the remaining time of the dishwasher cycle and other information onto the floor in front of your machine. Stylish, contemporary and practical, there's no risk of disrupting your wash. The end of cycle sound can also be turned off, handy for open plan living.

Info Light

INFO LIGHT

Let the floor do the talking

Info Light projects a red light on the floor below your dishwasher which indicates that the machine is still running. Available across selected models, Info Light will stylishly project onto any kitchen floor.

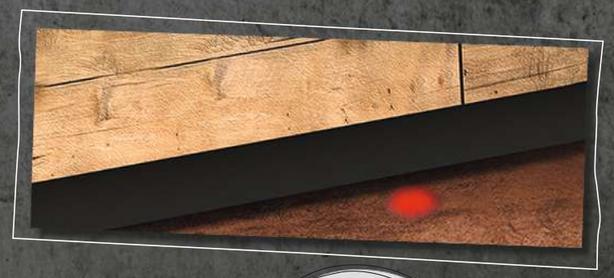

HOME CONNECT

Wash dishes, wherever you are

Our fully integrated N90 dishwasher is now Wi-Fi-enabled, so you can now manage your appliance via voice command or using the Home Connect app on your smart device. Our Easy Start feature can send instructions straight to your dishwasher remotely and will automatically determine the best combination of programme to suit your washing requirements through asking a series of simple questions about your load. Worrying about topping up your dishwasher tablets is now a chore of the past as our Home Connect app will monitor how many tablets your dishwasher has used and you'll receive a reminder for when your tabs are running out. Better yet, your dishwasher can even put in an order for more tabs when you set up an Amazon Dash account. Now that's easy cleaning!

HOME CONNECT IS COMPATIBLE WITH AMAZON ALEXA AND GOOGLE ASSISTANT

Home Connect

KEY FEATURES

CHEF 70°

EXTRA CLEANING POWER FOR CREATIVE COOKS

With a hotter setting and a powerful spray, the Chef 70° programme is perfect for cleaning even the dirtiest pots, pans and cooking utensils. Items placed in the lower basket are subject to higher spray pressures, eliminating the need for soaking and effectively removing even the most stubborn stains.

DOOR OPEN ASSIST

The ideal choice for seamless kitchens

Door Open Assist is the perfect solution for anybody looking to achieve a sleek, handleless design in their kitchen. Simply press lightly on the front of the unit to open the dishwasher door. Ideal for a range of integrated designs, Door Open Assist is also a convenient addition to busy kitchens. Electronic child lock can be activated creating a double push to open.

NEFF SPARKLE

CARE FOR YOUR MOST DELICATE GLASSWARE

Introducing NEFF Sparkle, the perfect mix of conditions to clean your delicate glassware, so you can relax and enjoy the company of your guests. NEFF Sparkle is a combination of the Glass 40 programme, the top basket area, and either heat exchanger or Shine&Dry drying systems to clean your items impeccably without worry.

ZEOLITH

A form of mineral, Zeolith has the ability to absorb moisture and turn it in to heat. The heat produced naturally by Zeolith is used during the drying cycle, ensuring that no additional energy is needed to dry your cookware. With the ability to absorb moisture, your glasses will come out steam free and will be cool enough to handle. Automatically activated by programmes with a drying phase, Zeolith regenerates itself and lasts a lifetime, so you don't have to maintain it.

DISHWASHER FUNCTIONS & PROGRAMMES

All of our dishwashers come with a choice of programmes, from intensive wash cycles capable of tackling tough burnt on food, to delicate washes for glassware.

FUNCTIONS & PROGRAMMES

AQUA STOP
Protects inlet and outlet hoses from leakage. A safety valve prevents any more water from entering the dishwasher and overflowing – even when the machine is off.

TOUCH CONTROL
Makes it possible to select programmes with the lightest of touches.

HEAT EXCHANGER
Ensures that the drying phase of programmes is energy efficient and glassware is fully protected by preventing extreme temperatures.

RESIDUAL DRYING SYSTEM
Uses a very hot final rinse programme to create heat that evaporates water droplets, subsequently leaving items beautifully clean and dry. And if putting plasticware in the dishwasher we would recommend using the Extra Dry function to leave them perfectly dry.

LARGE ITEM SPRAY
Designed for washing tall items such as roasting pans, oven shelves and tall vases, the top basket is removed, and an additional spray head is fitted to the back of the appliance. This showers the items to achieve excellent cleaning results.

EASY CLEAN
Give your dishwasher a deep clean with the new Easy Clean programme. Simply run the high temperature setting together with some dishwasher cleaner in an empty machine to remove limescale and grease from inside the cavity.

CHILD SAFETY LOCK
Prevents children from being able to open the door easily and can be fitted to the machine at the time of installation. Dishwashers with Door Open Assist have the ability to activate an electronic Child Lock, requiring a double push to open.

AUTOMATIC PROGRAMMES
Take the worry out of selecting exactly the right programme and let the machine do it for you. Automatically changes settings to ensure you get the best clean for your load.

VARIO SPEED AND VARIO SPEED PLUS
A quicker wash option that still provides a hygienically clean and dry load. Vario Speed reduces programme times by up to 50% and Vario Speed Plus by up to 66%.

HYGIENE PLUS OPTION
Provides a hotter final rinse, with 70°C water for 10 minutes, to effectively cleanse items such as chopping boards and cooking utensils*.

INTENSIVE WASH ZONE
Activates higher wash temperatures and increases spray arm pressure in the bottom basket, while maintaining a more gentle wash in the top basket.

HALF LOAD
Uses up to 20% less water and up to 10% less energy than a full load. This programme will wash up to six place settings and is flexible enough to allow for loading dishes anywhere in the dishwasher.

AQUA SENSORS
Measures the amount of soiling in the dishwasher to adjust the level of water used.

LOAD SENSOR
Load sensor recognises how many dishes are loaded, adjusts the water consumption and enables the lowest noise levels.

SHINE&DRY
By increasing the amount of water during the rinse cycle and extending the drying phase, water marks are prevented and the drying result is further improved.

EMOTIONLIGHT
LED lights in the front edge light up the dishwasher cavity.

10 YEAR ANTI-RUST WARRANTY
Due to advanced materials and manufacturing technologies, in addition to our standard appliance warranty we are able to provide a free of charge warranty against rusting-through of the dishwasher's inner cavity.

*Please note this programme does not sterilise.

FULLY INTEGRATED DISHWASHERS

Tough on pots and pans, gentle on glassware and crockery

Our fully integrated dishwashers are packed with clever features such as Home Connect Wi-Fi connectivity, Time Light, Door Open Assist and basket flexibility to take care of all of your cookware. Offering a range of intelligent programs from our Chef 70° to tackle the most stubborn stains and NEFF Sparkle for your most delicate glassware, we've created a cleaning solution for all of your everyday cooking and dining utensils. Selected models include an A+++ energy efficiency rating and Zeolith mineral assisted drying, leaving dishes beautifully clean without using excessive energy.

S517T80D6E
Fully Integrated Dishwasher (60cm) **N 90**

DESIGN/PERFORMANCE

APPLIANCE TYPE	60CM FULLY INTEGRATED				
COLLECTION	N 90	N 70	N 70	N 50	N 50
MODEL NO.	S517T80D6E	S515T80D1G	S515U80D2G	S713N60X1G	S723N60X1G
HIGHLIGHTS	Home Connect, A+++, Zeolith®, Door open assist, TFT display, Time Light, Flex 3 baskets and drawer	39dB, Heat Exchanger, Door open assist, Time Light, Flex 3 baskets and drawer	6.7L water consumption, Heat Exchanger, Door open assist, TimeLight, Flex 3 baskets and drawer	Vario Hinge, Heat Exchanger, InfoLight (red), FlexDrawer 2, Flex 2 baskets with coloured touch points	86.5cm extra-height with Vario Hinge, Heat Exchanger, InfoLight (red), FlexDrawer 2, Flex 2 baskets with coloured touch points
Control Panel	Grey touch control with LCD display	Grey touch control with LED display	Grey touch control with LED display	Stainless steel push button with LED display	Stainless steel push button with LED display
Height (cm) / Hinge Type	81.5 / Fixed	81.5 / Fixed	81.5 / Fixed	81.5 / Vario Hinge	86.5 / Vario Hinge
DESIGN FEATURES					
Home Connect Wi-Fi connectivity	●				
Floor Projection Display	Time Light	Time Light	Time Light	Info Light (red)	Info Light (red)
Door Open Assist	●	●	●		
NEFF Sparkle	●	●	●	●	●
Drying system	Zeolith®	Heat Exchanger	Heat Exchanger	Heat Exchanger	Heat Exchanger
Interior Emotion Light	White	White	White	White	White
Basket type	Flex 3	Flex 3	Flex 3	Flex 2 with coloured touch points	Flex 2 with coloured touch points
Flex Drawer	Flex Drawer 3	Flex Drawer 3	Flex Drawer 3	Flex Drawer 2	Flex Drawer 2
Adjustable upper basket	Rack-Matic 3-stage	Rack-Matic 3-stage	Rack-Matic 3-stage	Rack-Matic 3-stage	Rack-Matic 3-stage
Largest loadable dish upper / lower basket cm	21 / 31	21 / 31	21 / 31	21 / 31	23 / 34
Number of flip tines in upper / lower rack	6 / 8	6 / 8	6 / 8	2 / 4	2 / 4
Real-time clock	●				
Start delay time max h	24	24	24	24	24
End of cycle indicator	Acoustic	Acoustic	Acoustic	Acoustic	Acoustic
Rinse aid & salt light indicators	●	●	●	●	●
Aqua & Load sensor technology	●	●	●	●	●
Child safety	●	●	●	●	●
Self-cleaning filter system	●	●	●	●	●
AquaStop flood protection system	●	●	●	●	●
PROGRAMMES / FUNCTIONS					
List of programmes	Chef 70°C , Auto 45-65°C, Eco 50°C, Silence 50°C, Short 60°C, Glass 40°C, Quick 45°C, Pre-Rinse	Chef 70°C, Auto 45-65°C, Eco 50°C Silence 50°C, Glass 40°C, 1 hour 65°C, Quick 45°C, Pre-Rinse	Chef 70°C, Auto 45-65°C, Eco 50°C, Silence 50°C, Glass 40°C, 1 hour 65°C, Quick 45°C, Pre-Rinse	Chef 70°C, Auto 45-65°C, Eco 50°C, Glass 40°C, 1 hour 65°C, Pre-Rinse	Chef 70°C, Auto 45-65°C, Eco 50°C, Glass 40°C, 1 hour 65°C, Pre-Rinse
Additional operational options	Remote Start, Shine&Dry, HygienePlus, Intensive Zone, VarioSpeed Plus	Extra Dry, HygienePlus, Intensive Zone, VarioSpeed Plus	Extra Dry, HygienePlus, Intensive Zone, VarioSpeed Plus	Extra Dry, HygienePlus, VarioSpeed Plus	Extra Dry, HygienePlus, VarioSpeed Plus
Easy Clean	●	●	●	●	●
Number of different wash temperatures	6	5	5	5	5
TECHNICAL SPECIFICATIONS					
Reference programme for measurements	Economy 50	Economy 50	Economy 50	Economy 50	Economy 50
Energy efficiency class	A+++	A+	A++	A++	A++
Total annual energy (kWh) / water (litres) consumption[1]	237 / 2660	299 / 2660	262 / 1876	266 / 2660	266 / 2660
Energy (kWh) / water (litres) consumption[2]	0.83 / 9.5	1.05 / 9.5	0.92 / 6.7	0.93 / 9.5	0.93 / 9.5
Number of place settings	14	14	13	14	14
Noise level (dB(A) re 1 pW)	41 (39 in Silence Programme)	39 (37 in Silence Programme)	44 (41 in Silence Programme)	46	46
Total cycle time of reference programme min	195	195	235	225	225
Length of electrical supply cord cm	175	175	175	175	175
Length of inlet / oulet hose cm	165 / 190	165 / 190	165 / 190	165 / 190	165 / 190
Maximum height for installation mm	875	875	875	875	925
Maximum adjustability feet mm	60	60	60	60	60
Width / depth of the product mm	598 / 550	598 / 550	598 / 550	598 / 550	598 / 550
Maximum width for installation mm	600	600	600	600	600
Net weight / gross weight kg	52 / 55	48 / 51	41 / 44	35 / 38	38 / 40
Maximum accepted water hardness	50°DH	50°DH	50°DH	50°DH	50°DH
Maximum temperature for water intake[3] °C	60	60	60	60	60
Interior cavity	Stainless steel	Stainless steel	Stainless steel	Stainless steel	Stainless steel
Included accessories	Variable cutlery basket, Steam deflection plate	Large item spray head, Steam deflection plate	Large item spray head, Steam deflection plate	Large item spray head, Steam deflection plate	Large item spray head, Steam deflection plate

All of our dishwashers have Aqua Stop water protection, detergent aware, Dosage Assist and a door lock as standard. All NEFF dishwashers are suitable for use with doors from 2.5kg-8.5kg apart from SlimLine S875HKX20G (2.5kg to 7.5kg) and VarioHinge models S713N60X1G and S723N60X1G (4.5kg to 11.0kg) if the correct door springs are installed. All models comply with COMMISSION REGULATION (EC) No 1275/2008 with regard to eco design requirements for standby and off mode electric power consumption. Data valid in this table as of July 2020. Subject to modification without prior notice.

• Yes, model has this feature. [1] Based on 280 standard cleaning cycles using cold water fill, including consumption of the standby mode. [2] The Consumption per cleaning cycle of the "Eco 50" programme using cold water fill. [3] We would recommend our dishwashers are connected to the mains water supply where possible. However, they may also be connected to an external water softener as long as the water softener produces softened water less than 1.1 mm/litre (7.0°e) and the water softener in the appliance is turned off. Please contact product adviser for further information. Water pressure required: 0.5-10 Bar. Flow rate: 10 litres per minute. Inlet valve connected directly to ¾" screwed joint.

FULLY INTEGRATED DISHWASHERS

Room to fit it all

Completely invisible behind your chosen cabinetry, it's incredibly quiet, yet packed with ideas to make cleaning as effortless and eco-friendly as possible. Our fully-integrated models with Door Open Assist are fitted with no handle in sight – just lightly press the front of the unit to open. The InfoLight function projects a red light onto the floor when the dishwasher is still running, so you never need to interrupt a cycle. Chef 70° gets rid of the most stubborn stains plus features like our Flex 1 & Flex 2 baskets and FlexDrawer 2 make your dishwasher as adaptable as possible.

S513N60X1G
Fully Integrated Dishwasher (60cm) **N 50**

DESIGN/PERFORMANCE

APPLIANCE TYPE	60CM FULLY INTEGRATED				
COLLECTION	N 50	N 50	N 50	N 30	N 30
MODEL NO.	S513N60X1G	S513K60X1G	S513G60X0G	S511A50X0G	S511A50X1G
HIGHLIGHTS	Heat Exchanger, InfoLight (red), FlexDrawer 2, Flex 2 baskets with coloured touch points	Heat Exchanger, Info Light (red), Flex Drawer 2, Flex 2 baskets with coloured touch points	Info Light (red), 10L water consumption, Flex 2 baskets with coloured touch points	48dB, 11.7L water consumption Info Light (red), Flex 1 baskets	Info Light (red), Flex 1 baskets
Control Panel	Stainless steel push button with LED display	Black push button with LED display	Black push button with LED display	Black tap through control with LED indicators	Black tap through control with LED indicators
Height (cm) / Hinge Type	81.5 / Fixed	81.5 / Fixed	81.5 / Fixed	81.5 / Fixed	81.5 / Fixed
DESIGN FEATURES					
Home Connect Wi-Fi connectivity					
Floor Projection Display	Info Light (red)	Info Light (red)	Info Light (red)	Info Light (red)	Info Light (red)
Door Open Assist					
NEFF Sparkle	●	●	●		
Drying system	Heat Exchanger	Heat Exchanger	Heat Exchanger	Residual	Residual
Interior Emotion Light	White				
Basket type	Flex 2 with coloured touch points	Flex 2 with coloured touch points	Flex 2 with coloured touch points	Flex 1	Flex 1
Flex Drawer	Flex Drawer 2	Flex Drawer 2			
Adjustable upper basket	Rack-Matic 3-stage	Rack-Matic 3-stage	Rack-Matic 3-stage	When empty	When empty
Largest loadable dish upper / lower basket cm	21 / 31	21 / 31	27 / 31	27 / 31	27 / 31
Number of flip tines in upper / lower rack	2 / 4	2 / 4	2 / 4	0 / 2	0 / 2
Real-time clock					
Start delay time max hours	24	24	24	9	9
End of cycle indicator	Acoustic	Acoustic	Acoustic	Acoustic	Acoustic
Rinse aid & salt light indicators	●	●	●	●	●
Aqua & Load sensor technology	●	●	●	●	●
Child safety	●	●	●	●	●
Self-cleaning filter system	●	●	●	●	●
AquaStopPlus flood protection system	●	●	●	●	●
PROGRAMMES / FUNCTIONS					
List of programmes	Chef 70°C, Auto 45-65°C, Eco 50°C, Glass 40°C, 1 hour 65°C, Pre-Rinse	Chef 70°C, Auto 45-65°C, Eco 50°C, Glass 40°C, 1 hour 65°C, Pre-Rinse	Chef 70°C, Auto 45-65°C, Eco 50°C, Glass 40°C, 1 hour 65°C, Pre-Rinse	Chef 70°C, Auto 45-65°C, Eco 50°C, Glass 40°C, Quick 45°C	Chef 70°C, Normal 65°C, Eco 50°C, Quick 45°C, Pre-Rinse
Additional operational options	Extra Dry, HygienePlus, VarioSpeed Plus	Extra Dry, VarioSpeed Plus	Extra Dry, VarioSpeed Plus	VarioSpeed	VarioSpeed
Easy Clean	●	●	●		
Number of different wash temperatures	5	5	5	5	4
TECHNICAL SPECIFICATIONS					
Reference programme for measurements	Economy 50	Economy 50	Economy 50	Economy 50	Economy 50
Energy efficiency class	A++	A++	A++	A+	A+
Total annual energy (kWh) / water litres consumption[1]	266 / 2660	262 / 2660	258 / 2800	290 / 3300	290 / 3920
Energy (kWh) / water (litres) consumption[2]	0.93 / 9.5	0.92 / 9.5	0.9 / 10.0	1.02 / 11.7	1.02 / 14.0
Number of place settings	14	13	12	12	12
Noise level (dB(A) re 1 pW)	46	48	48	48	52
Total cycle time of reference programme min	225	210	210	210	210
Length of electrical supply cord cm	175	175	175	175	175
Length of inlet / oulet hose cm	165 / 190	165 / 190	165 / 190	165 / 190	165 / 190
Maximum height for installation mm	875	875	875	875	875
Maximum adjustability feet mm	60	60	60	60	60
Width / depth of the product mm	598 / 550	598 / 550	598 / 550	598 / 550	598 / 550
Maximum width for installation mm	600	600	600	600	600
Net weight / gross weight kg	34 / 37	26 / 28	43 / 45	32 / 34	30 / 32
Maximum accepted water hardness	50°DH	50°DH	50°DH	35°DH	35°DH
Maximum temperature for water intake[3] °C	60	60	60	60	60
Interior cavity	Stainless steel	Stainless steel / Polinox base	Stainless steel / Polinox base	Stainless steel / Polinox base	Stainless steel / Polinox base
Included accessories	Large item spray head, Steam deflection plate	Large item spray head, Steam deflection plate	Large item spray head, Steam deflection plate	Large item spray head, Steam deflection plate	Large item spray head, Steam deflection plate

All of our dishwashers have Aqua Stop water protection, detergent aware, Dosage Assist and a door lock as standard. All NEFF dishwashers are suitable for use with doors from 2.5kg-8.5kg apart from SlimLine S875HKX20G (2.5kg to 7.5kg) and VarioHinge models S713N60X1G and S723N60X1G (4.5kg to 11.0kg) if the correct door springs are installed. All models comply with COMMISSION REGULATION (EC) No 1275/2008 with regard to eco design requirements for standby and off mode electric power consumption. Data valid in this table as of July 2020. Subject to modification without prior notice.

• Yes, model has this feature. [1] Based on 280 standard cleaning cycles using cold water fill, including consumption of the standby mode. [2] The Consumption per cleaning cycle of the "Eco 50" programme using cold water fill. [3] We would recommend our dishwashers are connected to the mains water supply where possible. However, they may also be connected to an external water softener as long as the water softener produces softened water less than 1.1 mm/litre (7.0°e) and the water softener in the appliance is turned off. Please contact product adviser for further information. Water pressure required: 0.5-10 Bar. Flow rate: 10 litres per minute. Inlet valve connected directly to ¾" screwed joint.

SEMI-INTEGRATED DISHWASHERS

Flexible solutions for your bulkiest cookware

Providing easy access to a front control panel and seamlessly integrating with your furniture, our semi-integrated dishwashers are a popular choice in kitchen design.

S41E50W1GB
Semi-Integrated Dishwasher (60cm) **N 30**

Door Open Assist

APPLIANCE TYPE		60CM SEMI-INTEGRATED		
COLLECTION		N 30	N 30	N 30
MODEL NO.		S41E50W1GB	S41E50N1GB	S41E50S1GB
HIGHLIGHTS		Half load, Flex 1 baskets	Half load, Flex 1 baskets	Half load, Flex 1 baskets
Control Panel		White control panel	Stainless steel control panel	Black control panel
Height (cm) / Hinge Type		81.5 / Fixed	81.5 / Fixed	81.5 / Fixed
DESIGN FEATURES				
Home Connect Wi-Fi connectivity				
Floor Projection Display				
Door Open Assist				
NEFF Sparkle				
Drying system		Residual	Residual	Residual
Interior Emotion Light				
Basket type		Flex 1	Flex 1	Flex 1
Flex Drawer				
Adjustable upper basket		When empty	When empty	When empty
Largest loadable dish upper / lower basket	cm	27 / 31	27 / 31	27 / 31
Number of flip tines in upper / lower rack		0 / 2	0 / 2	0 / 2
Real-time clock				
Start delay time max	h	24	24	24
End of cycle indicator				
Rinse aid & salt light indicators		•	•	•
Aqua & Load sensor technology		•	•	•
Child safety		•	•	•
Self-cleaning filter system		•	•	•
AquaStopPlus flood protection system		•	•	•
PROGRAMMES / FUNCTIONS				
List of programmes		Chef 70°C, Auto 45-65°C, Eco 50°C, Quick 45°C, Pre-Rinse	Chef 70°C, Auto 45-65°C, Eco 50°C, Quick 45°C, Pre-Rinse	Chef 70°C, Auto 45-65°C, Eco 50°C, Quick 45°C, Pre-Rinse
Additional operational options		VarioSpeed, Half load	VarioSpeed, Half load	VarioSpeed, Half load
Easy Clean				
Number of different wash temperatures		4	4	4
TECHNICAL SPECIFICATIONS				
Reference programme for measurements		Economy 50	Economy 50	Economy 50
Energy efficiency class		A+	A+	A+
Total annual energy (kWh) / water litres consumption[1]		290 / 2660	290 / 2660	290 / 2660
Energy (kWh) / water (litres) consumption[2]		1.02 / 9.5	1.02 / 9.5	1.02 / 9.5
Number of place settings		12	12	12
Noise level (dB(A) re 1 pW)		46	46	46
Total cycle time of reference programme	min	210	210	210
Length of electrical supply cord	cm	175	175	175
Length of inlet / oulet hose	cm	165 / 190	165 / 190	165 / 190
Maximum height for installation	mm	875	875	875
Maximum adjustability feet	mm	60	60	60
Width / depth of the product	mm	598 / 550	598 / 550	598 / 550
Maximum width for installation	mm	600	600	600
Net weight / gross weight	kg	34 / 36	34 / 36	34 / 36
Maximum accepted water hardness		50°DH	50°DH	50°DH
Maximum temperature for water intake	°C[3]	60	60	60
Interior cavity		Stainless steel / Polinox base	Stainless steel / Polinox base	Stainless steel / Polinox base
Included accessories		Large item spray head, Steam deflection plate	Large item spray head, Steam deflection plate	Large item spray head, Steam deflection plate

DESIGN/PERFORMANCE

All of our dishwashers have Aqua Stop water protection, detergent aware, Dosage Assist and a door lock as standard. All NEFF dishwashers are suitable for use with doors from 2.5kg-8.5kg apart from SlimLine S875HKX20G (2.5kg to 7.5kg) and VarioHinge models S713N60X1G and S723N60X1G (4.5kg to 11.0kg) if the correct door springs are installed. All models comply with COMMISSION REGULATION (EC) No 1275/2008 with regard to eco design requirements for standby and off mode electric power consumption. Data valid in this table as of July 2020. Subject to modification without prior notice.

• Yes, model has this feature. [1] Based on 280 standard cleaning cycles using cold water fill, including consumption of the standby mode. [2] The Consumption per cleaning cycle of the "Eco 50" programme using cold water fill. [3] We would recommend our dishwashers are connected to the mains water supply where possible. However, they may also be connected to an external water softener as long as the water softener produces softened water less than 1.1 mm/litre (7.0°e) and the water softener in the appliance is turned off. Please contact product adviser for further information. Water pressure required: 0.5-10 Bar. Flow rate: 10 litres per minute. Inlet valve connected directly to ¾" screwed joint.

SLIMLINE DISHWASHERS

Now every kitchen can benefit from a dishwasher

Our SlimLine dishwashers are ideal for cooks who need the convenience of a dishwasher without impacting on valuable kitchen space. Incorporating a range of innovative NEFF features such as Chef 70°, Vario Speed, Dosage Assist, Emotion Light and Vario Hinge a smaller dishwasher doesn't mean you have to sacrifice performance.

S875HKX20G
SlimLine Dishwasher (45cm) **N 50**

APPLIANCE TYPE	45CM FULLY INTEGRATED
COLLECTION	N 50
MODEL NO.	S875HKX20G
HIGHLIGHTS	Vario Hinge, Home Connect, Heat Exchanger, InfoLight (red), Flex 1 baskets
Control Panel	Stainless Steel touch control button with LED display
Height (cm) / Hinge Type	81.5 / Vario Hinge
DESIGN FEATURES	
Home Connect Wi-Fi connectivity	●
Floor Projection Display	InfoLight (red)
Door Open Assist	
NEFF Sparkle	●
Drying system	Heat Exchanger
Interior Emotion Light	
Basket type	Flex 1
Flex Drawer	
Adjustable upper basket	When empty
Largest loadable dish upper / lower basket cm	27 / 31
Number of flip tines in upper / lower rack	0 / 2
Real-time clock	
Start delay time max h	24
End of cycle indicator	Acoustic
Rinse aid & salt light indicators	●
Aqua & Load sensor technology	●
Child safety	●
Self-cleaning filter system	●
AquaStopPlus flood protection system	●
PROGRAMMES / FUNCTIONS	
List of programmes	Chef 70°C, Auto 45-65°C, Eco 50°C, Glass 40°C, Classic 60°C, Favourite
Additional operational options	Remote start, VarioSpeed Plus, Intensive Zone, ExtraDry
Easy Clean	●
Number of different wash temperatures	6
TECHNICAL SPECIFICATIONS	
Reference programme for measurements	Economy 50
Energy efficiency class	A+
Total annual energy (kWh) / water litres consumption[1]	220 / 2380
Energy (kWh) / water (litres) consumption[2]	0.77 / 8.5
Number of place settings	9
Noise level (dB(A) re 1 pW)	46
Total cycle time of reference programme min	220
Length of electrical supply cord cm	175
Length of inlet / oulet hose cm	165 / 205
Maximum height for installation mm	875
Maximum adjustability feet mm	60
Width / depth of the product mm	448 / 550
Maximum width for installation mm	450
Net weight / gross weight kg	30 / 32
Maximum accepted water hardness	50°DH
Maximum temperature for water intake[3] °C	60
Interior cavity	Stainless steel
Included accessories	Large item spray head, Steam deflection plate

DESIGN/PERFORMANCE

All of our dishwashers have Aqua Stop water protection, detergent aware, Dosage Assist and a door lock as standard. All NEFF dishwashers are suitable for use with doors from 2.5kg-8.5kg apart from SlimLine S875HKX20G (2.5kg to 7.5kg) and VarioHinge models S713N60X1G and S723N60X1G (4.5kg to 11.0kg) if the correct door springs are installed. All models comply with COMMISSION REGULATION (EC) No 1275/2008 with regard to eco design requirements for standby and off mode electric power consumption. Data valid in this table as of July 2020. Subject to modification without prior notice.

• Yes, model has this feature. [1] Based on 280 standard cleaning cycles using cold water fill, including consumption of the standby mode. [2] The Consumption per cleaning cycle of the "Eco 50" programme using cold water fill. [3] We would recommend our dishwashers are connected to the mains water supply where possible. However, they may also be connected to an external water softener as long as the water softener produces softened water less than 1.1 mm/litre (7.0°e) and the water softener in the appliance is turned off. Please contact product adviser for further information. Water pressure required: 0.5-10 Bar. Flow rate: 10 litres per minute. Inlet valve connected directly to ¾" screwed joint.

LAUNDRY

Quality, performance and efficiency are standard on all our laundry appliances

A good laundry appliance should be reliable enough to provide perfect results again and again. We have three types of model to cover all your laundry needs: washing machines, washer dryer combination models and tumble dryers. All feature our signature innovations, designed to improve efficiency and, most importantly, to make life easier.

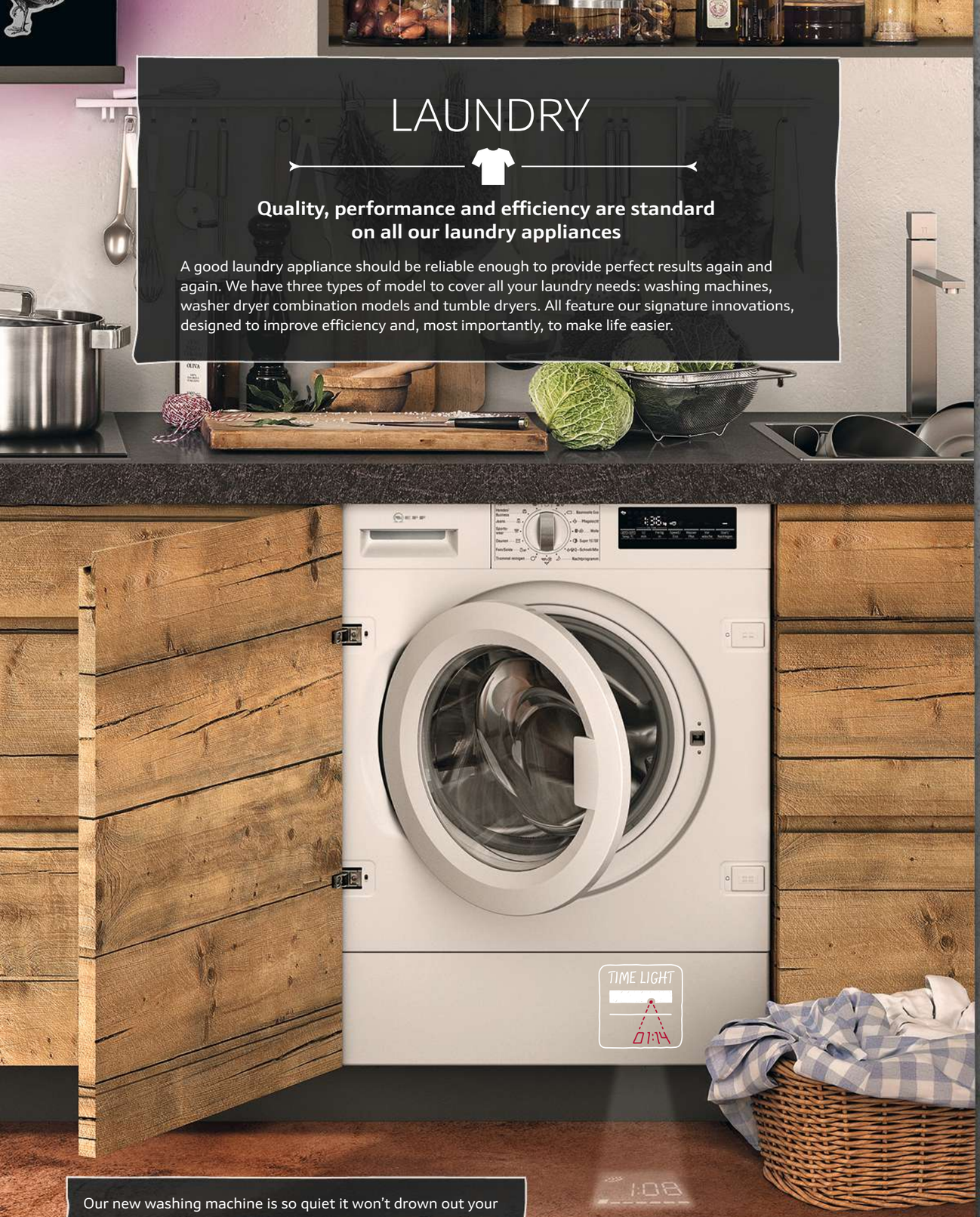

Our new washing machine is so quiet it won't drown out your conversation. We have also added the innovative **Time Light** feature so you can see when your washing will be finished even when the furniture door is closed. A perfect solution for open plan kitchens. Featured on model W544BX1GB (shown).

LAUNDRY APPLIANCE FEATURES

LESS IRONING
Reduces the creasing of clothes as the water is gently removed from the wash with a light interval spin at the end of the cycle.

TIME DELAY
Allows you to programme the machine up to 24 hours in advance to suit any schedule or to take advantage of off-peak electricity rates.

TIME LIGHT
The time remaining of the wash cycle is clearly projected on to any floor surface. So you don't have to open the door to see when your washing will be finished. Perfect for open plan kitchens. Featured on model W544BX1GB.

FLEXI TIME
Cuts programme times by up to 30%. Simply select the cycle you wish to run and then select Flexi Time.

EXTRA RINSE OPTION
Available on almost every programme, it's especially helpful for sensitive skin.

INTELLIGENT WATER SYSTEM
Efficient washing is made simple with our built-in load sensor. With up to 256 load levels distinguished and a flow sensor for detecting the kind of textile, the amount of water used is tailored to your wash.

STAIN-REMOVAL PROGRAMME
Banish even the most stubborn stains with our stain-specific programmes. With dedicated settings for red wine spillages, tomato splashes and butter/oil residue, there's no need to worry about cooking-related stains.

DRUM CLEAN WITH REMINDER
Prevent odours and germs with our handy Drum Clean reminder. When the machine detects a consecutive number of low washing temperatures (<40°), you'll be prompted to start the Drum Clean programme.

Some features are relevant for freestanding models only. For full details please refer to the website.

ANTI-VIBRATION SIDE PANELS
Our new side panels increase stability and reduce vibrations during even the fastest spin cycle. With a 3-step system which absorbs motor vibrations, centres unbalanced laundry and compensates for vibrations on the side walls, you benefit from low noise washing with every load.

SENSOR DRYING
Continuously monitors the drying performance using sophisticated sensors to prevent overheating and over drying. The dryer stops automatically when the correct level of dryness is reached to deliver the finest fabric care and reduce ironing.

ECO BAR / ECO BAR PLUS
Know how much energy you are using with the new Eco Bar feature, available on selected freestanding appliances. The LED bar displays five possible consumption levels. With Eco Bar Plus, energy and water consumption is displayed, giving you an indication of resources used on your chosen programme and options. The fewer LEDs illuminated, the more energy you are saving

AQUA STOP / AQUA SECURE PLUS
Protects inlet and outlet hoses from leakage. A safety valve, prevents any more water from entering the washing machine.

DRUM LIGHT
The new drum interior LED light is a big help when unloading your fully-integrated NEFF built-in washing machine. It lights up the inside brightly enough so you'll never overlook another item of laundry.

RELOAD FUNCTION
If you need to add or remove an item after the programme has started, you can pause the cycle by pressing the Start/Reload button. The machine will check whether you can open the door and, if so, it lets you. To resume operation, just press the Start/Reload button again.

Image shown for marketing purposes only.

INTEGRATED LAUNDRY

Designed to blend seamlessly with the rest of your kitchen.

Discreet and unobtrusive, our built-in washing machines and washer dryers remain hidden behind cabinet doors in the kitchen, maintaining a clean and coordinated look.

QUALITY PERFORMANCE AND EFFICIENCY

W544BX1GB
Built-in Washing Machine

DESIGN/PERFORMANCE

ULTIMATE SPACE SAVING SOLUTION

Our machines are easy to fit, slotting in neatly between two units. A full height furniture door has to be fitted to the front of our built-in machines and can be hinged from the left or right, but remember, the porthole door on the machine cannot be changed around. A plinth, which is easy to remove or cut out (to allow access to the pump and vent) should be fitted across the bottom.

W544BX0GB replaced by W544BX1GB October 2020.

W543BX0GB replaced by W543BX1GB April 2020.

V6540X1GB replaced by V6540X2GB November 2020.

V6320X1GB replaced by V6320X2GB November 2020.

MODEL NO.		W544BX1GB	W543BX1GB	V6540X2GB	V6320X2GB
		WASHING MACHINE	WASHING MACHINE	WASHER DRYER	WASHER DRYER
KEY FEATURES					
Time Light		●			
Electronic control dial		●	●	●	●
Time selection options		●	●	●	●
ADDITIONAL FEATURES					
Wave Drum		●	●		
Time delay (h)		24	24	24	19
Control panel lock		●	●	●	●
Water protection system		Aqua Stop	Aqua Stop	Aqua Stop	Aqua Secure
Display		LED	LED	LED	LED
STANDARD PROGRAMMES					
Cottons		●	●	●	●
Easycare programme		●	●	●	●
Wool programme		●	●	●	●
Delicates / Silk		●	●	●	●
Cold wash option		●		●	●
Intensive dry				●	●
Gentle dry				●	●
ADDITIONAL PROGRAMMES					
Super Quick 15 / 30'		● / ●	● / ●	● / –	
Dark wash		●			
Reduced noise wash		●		●	
Sportswear				●	
Mixed load		●	●	●	
Stain removal		Tomatoes, Red Wine, Butter / Oil			
Drum Clean		●			
Fluff removal programme				●	●
OPTIONS					
SpeedPerfect		●	●		
Intensive				●	●
Prewash		●		●	●
Extra rinse		●		●	●
Less ironing				●	●
Variable temperature		●		●	●
Variable spin speed		●	●	●	●
Flexi Time				●	●
PERFORMANCE					
Energy efficiency class		A+++ -10%	A+++ -10%	B	B
Capacity cotton (washing)	kg	8	8	7	7
Capacity cotton (drying)	kg			4	4
Maximum spin speed**	rpm	1400	1400	1400	1400
Drum volume	L	55	55	52	52
Noise level washing (dB(A) re 1pW)		41 / 68	41 / 68	57	57
Noise level spinning (dB(A) re 1pW)		66	66	74	74
Noise level drying (dB(A) re 1pW)				60	60
Appliance dimensions H x W x D	mm	818 x 596 x 544	818 x 596 x 544	820 x 595 x 580	820 x 595 x 580
Depth with door open 90°	mm	956	956	960	960
Height adjustable by	mm	12	12	15	15
Length of supply / drain hose	cm	220 / 220	220 / 220	200 / 200	200 / 200
Length of mains cable	cm	210	210	220	220
Door hinge placement		Left-hand	Left-hand	Left-hand	Left-hand

Not all options and programmes are shown, this is a guide, please refer to the website for more details. All models comply with COMMISSION REGULATION (EC) No 1275/2008 with regard to ecodesign requirements for standby and of mode electric power consumption. ** Values are rounded.

FREESTANDING LAUNDRY

Designed with utility rooms in mind

FREESTANDING WASHING MACHINES

W946UX0GB
Freestanding Washing Machine

DESIGN/PERFORMANCE

Energy A+++ | Energy -30% | 9 kg | 1400

W7460X5GB
Freestanding Washing Machine

DESIGN/PERFORMANCE

Energy A+++ | Energy -30% | 9 kg | 1400

W7460X4GB replaced by W7460X5GB October 2020.

W7461X0GB replaced by W946UX0GB September 2020.

MODEL NO.		W7460X5GB	W946UX0GB
KEY FEATURES			
i-DOS detergent dosing system		-	●
EcoSilence Drive		●	●
EcoBar / EcoBar +		● / –	– / ●
VarioPerfect / SpeedPerfect		– / ●	– / ●
AntiVibraton design		●	●
Reload facility		●	●
ADDITIONAL FEATURES			
Time delay	h	24	24
Control panel lock		●	●
Water protection system		Multiple Water protection	Multiple Water protection
STANDARD PROGRAMMES			
Cottons		●	●
Easy-care programme		●	●
Wool programme		●	●
Delicates / Silk		●	●
ADDITIONAL FEATURES			
Super Quick 15 / 30'		●	●
Sportswear		●	-
AllergyPlus		●	-
Dark wash		●	●
Mixed load		●	●
Reduced noise wash		-	-
Shirts and blouses		●	●
Down wear		-	-
Reduced ironing		-	●
AquaPlus / Extra Rinse		●	●
Pre Wash		●	●
Variable temperature / Variable spin		●	●
Drum Clean		●	●
PERFORMANCE / TECHNICAL INFORMATION			
Energy efficiency class		A+++ -30%	A+++ -30%
Capacity cotton	kg	9	9
Maximum spin speed**	rpm	1400	1400
Drum volume (l)	L	63	63
Noise level washing / spinning (dB(A) re 1pW)		49 / 75	48 / 72
Appliance dimensions H x W x D	mm	848 x 598 x 590	845 x 598 x 590
Depth with door open 90°	mm	1063	1063
Height adjustable by	mm	12	12
Length of supply / drain hose	cm	150 / 150	150 / 150
Length of mains cable	cm	210	210
Door hinge placement		Left-hand	Left-hand

FREESTANDING CONDENSER TUMBLE DRYER

R8580X3GB
Freestanding Tumble Dryer

DESIGN/PERFORMANCE

Energy B | 9 kg

MODEL NO.		R8580X3GB
KEY FEATURES		
AutoDry - Sensor Drying		●
Anti Vibration design		●
Anti Crease cycle (mins)		120
Reload facility		●
ADDITIONAL FEATURES		
Time delay (h)		●
Control panel lock		●
Interior drum light		●
PROGRAMMES / FUNCTIONS		
Cottons		●
Easy Care		●
Sportswear		●
Allergy +		●
Mixed Load		●
Shirts 15'		●
Rapid 40'		●
Down		●
Woolens		●
Timed programme - Warm		●
Timed programme - Cold		●
Reduced ironing		●
PERFORMANCE / TECHNICAL INFORMATION		
Energy efficiency class		B
Capacity cotton	kg	9
Ambient temperature range	°C	5-35°C
Noise level (dB(A) re 1 pW)		65
Dimensions of the product (H x W x D)	mm	842 x 598 x 599
Depth with door open 90°	mm	1091
Door hinge position		Right-hand

Not all options and programmes are shown, this is a guide, please refer to the website for more details. All models comply with COMMISSION REGULATION (EC) No 1275/2008 with regard to ecodesign requirements for standby and of mode electric power consumption. ** Values are rounded.

APPLIANCE LINE DRAWINGS

SLIDE&HIDE® PYROLYTIC OVENS WITH VARIO STEAM

B58VT68H0B, B57VS24H0B, B57VR22N0B (models with VarioSteam®)
B5AVM7HH0B, B5AVH6AH0B (models with added steam)

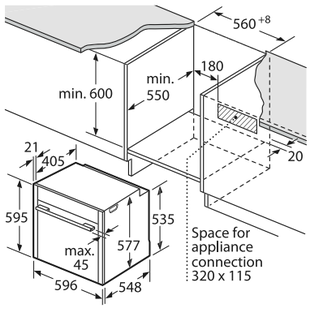

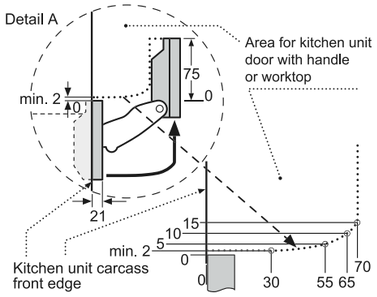

Hob type	min. worktop thickness	
	fitted	flush
Induction hob	37 mm	38 mm
Full surface Induction hob	47 mm	48 mm
Gas hob	30 mm	38 mm
Electric hob	27 mm	30 mm

If the appliance will be installed underneath a hob, the following worktop thicknesses (including substructure if necessary) must be taken into acccount.

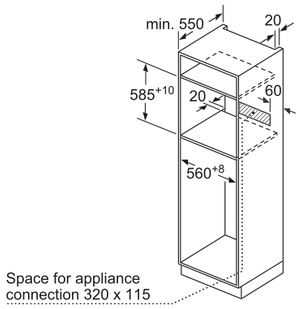

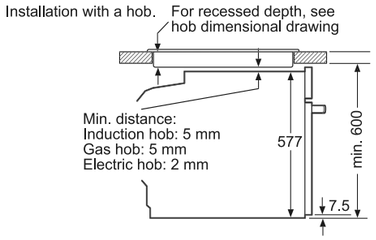

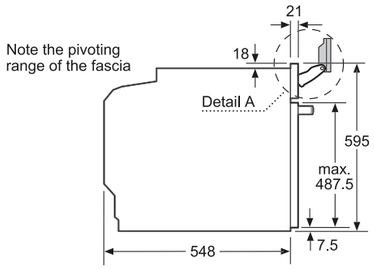

SLIDE&HIDE® PYROLYTIC OVENS WITH ADDED CLEANING

B58CT68H0B, B57CR22N0B

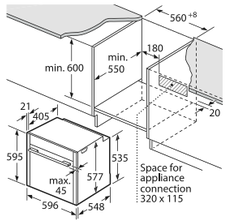

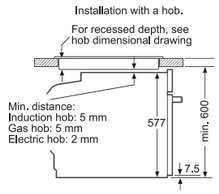

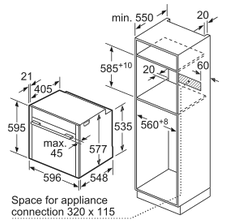

Hob type	min. worktop thickness	
	fitted	flush
Induction hob	37 mm	38 mm
Full surface Induction hob	47 mm	48 mm
Gas hob	30 mm	38 mm
Electric hob	27 mm	30 mm

If the appliance will be installed underneath a hob, the following worktop thicknesses (including substructure if necessary) must be taken into acccount.

B5ACM7HH0B, B6ACH7HH0B

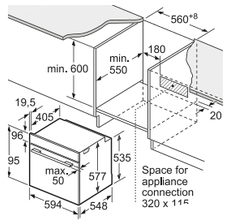

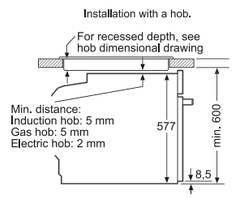

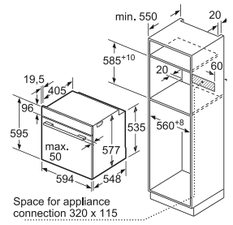

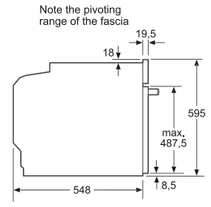

Hob type	min. worktop thickness	
	fitted	flush
Induction hob	37 mm	38 mm
Full surface Induction hob	47 mm	48 mm
Gas hob	30 mm	38 mm
Electric hob	27 mm	30 mm

If the appliance will be installed underneath a hob, the following worktop thicknesses (including substructure if necessary) must be taken into acccount.

SLIDE&HIDE® SINGLE OVENS WITH FULL STEAM

B48FT78H0B, B47FS34H0B

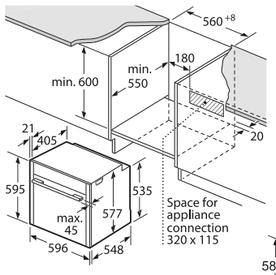

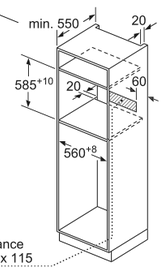

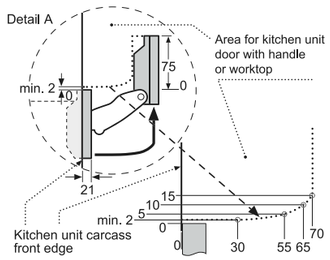

Hob type	min. worktop thickness	
	fitted	flush
Induction hob	37 mm	38 mm
Full surface Induction hob	47 mm	48 mm
Gas hob	30 mm	38 mm
Electric hob	27 mm	30 mm

If the appliance will be installed underneath a hob, the following worktop thicknesses (including substructure if necessary) must be taken into acccount.

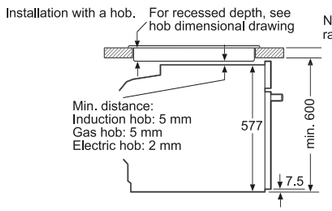

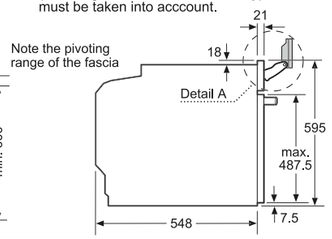

SLIDE&HIDE® SINGLE OVENS WITH VARIO STEAM

B47VS34H0B, B47VR32N0B (models with VarioSteam®)
B4AVH1AH0B (model with added steam)

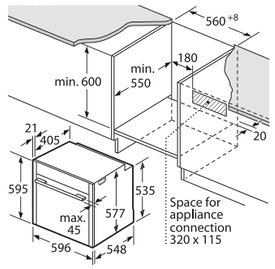

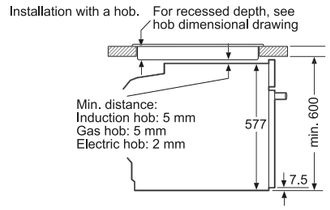

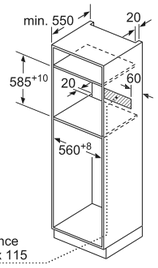

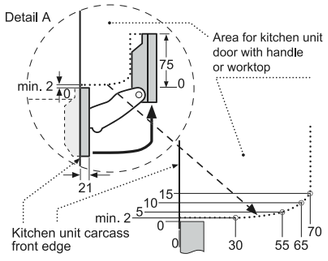

Measurements in mm. The line drawings featured in this brochure are provided as a guide to general dimensions only and are subject to amendment without prior notice.
For full dimensional and installation details please refer to the documentation supplied with the appliance.

Measurements in mm. The line drawings featured in this brochure are provided as a guide to general dimensions only and are subject to amendment without prior notice.
For full dimensional and installation details please refer to the documentation supplied with the applianc

SLIDE&HIDE® SINGLE OVENS

B47CS34N0B, B47CR32N0B

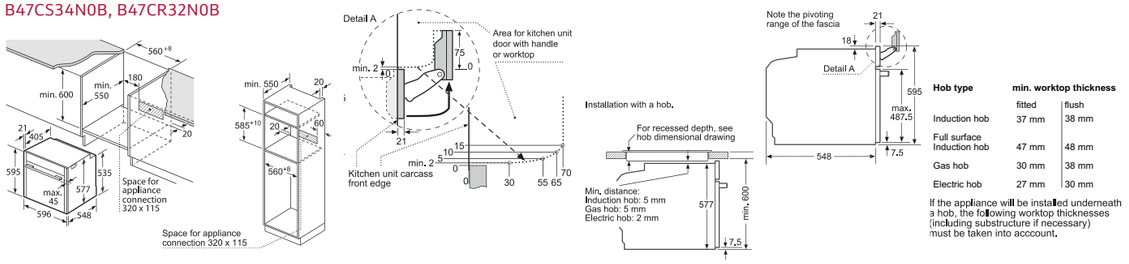

Hob type	min. worktop thickness	
	fitted	flush
Induction hob	37 mm	38 mm
Full surface Induction hob	47 mm	48 mm
Gas hob	30 mm	38 mm
Electric hob	27 mm	30 mm

If the appliance will be installed underneath a hob, the following worktop thicknesses (including substructure if necessary) must be taken into acccount.

B4ACM5HH0B, B4ACF1AN0B, B3ACE4HN0B

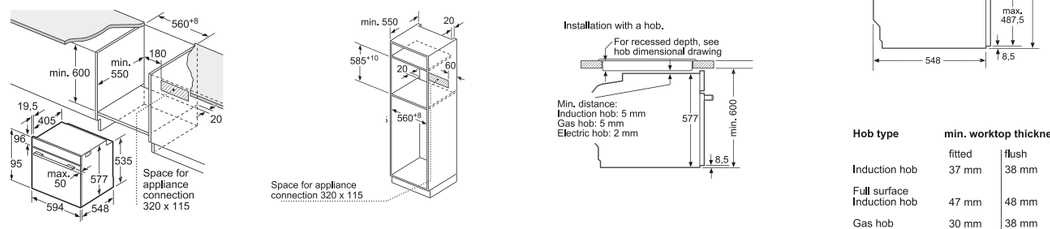

Hob type	min. worktop thickness	
	fitted	flush
Induction hob	37 mm	38 mm
Full surface Induction hob	47 mm	48 mm
Gas hob	30 mm	38 mm
Electric hob	27 mm	30 mm

If the appliance will be installed underneath a hob, the following worktop thicknesses (including substructure if necessary) must be taken into acccount.

SLIDE&HIDE® PYROLYTIC OVENS

B27CR22N1B, B57CS24H0B, B5ACH7AH0B

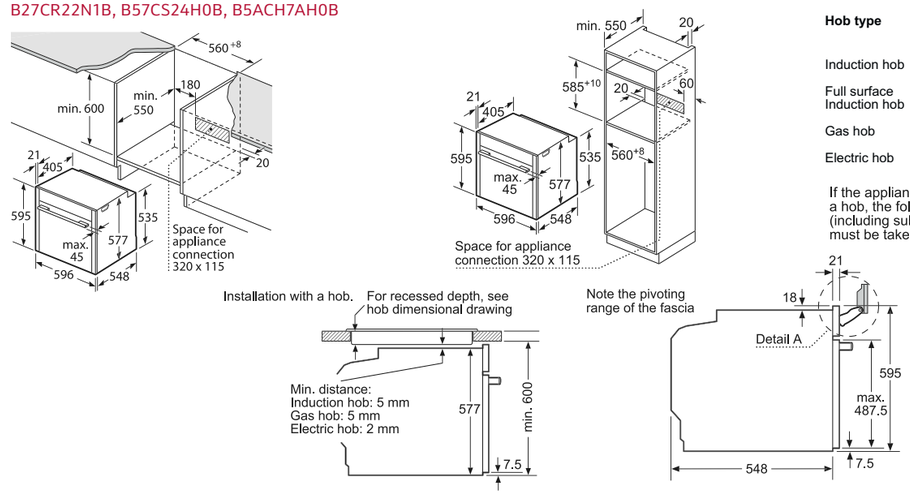

Hob type	min. worktop thickness	
	fitted	flush
Induction hob	37 mm	38 mm
Full surface Induction hob	47 mm	48 mm
Gas hob	30 mm	38 mm
Electric hob	27 mm	30 mm

If the appliance will be installed underneath a hob, the following worktop thicknesses (including substructure if necessary) must be taken into acccount.

B2ACH7HH0B

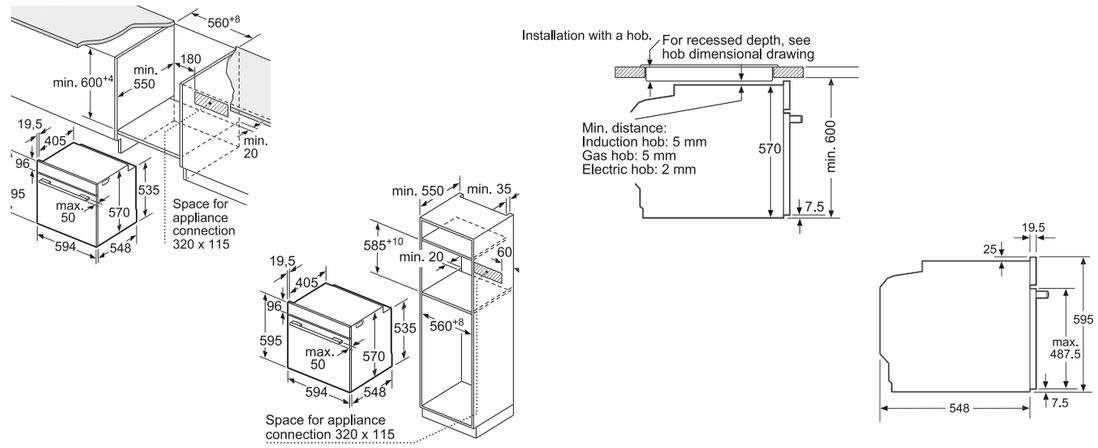

SINGLE OVENS

B17CR32N1B

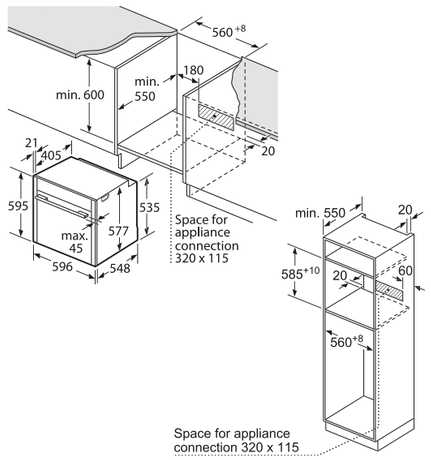

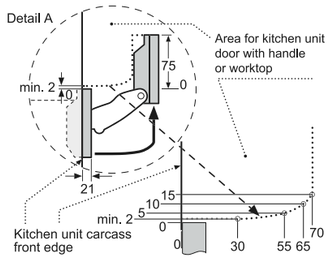

Hob type	min. worktop thickness	
	fitted	flush
Induction hob	37 mm	38 mm
Full surface Induction hob	47 mm	48 mm
Gas hob	30 mm	38 mm
Electric hob	27 mm	30 mm

If the appliance will be installed underneath a hob, the following worktop thicknesses (including substructure if necessary) must be taken into acccount.

Installation with a hob. For recessed depth, see hob dimensional drawing

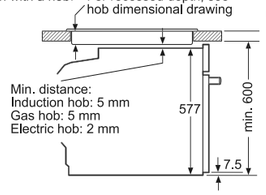

Note the pivoting range of the fascia

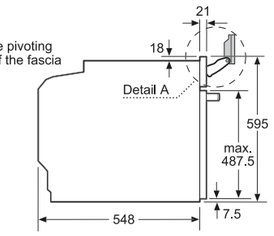

B1ACE4HN0B, B1ACE4HW0B

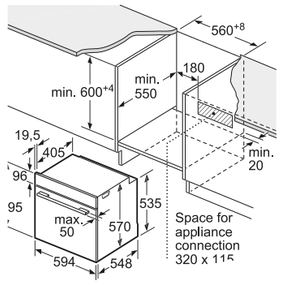

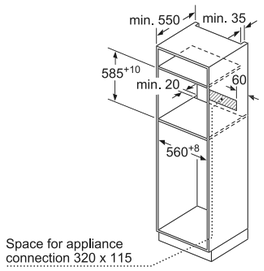

Installation with a hob.

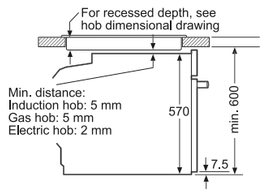

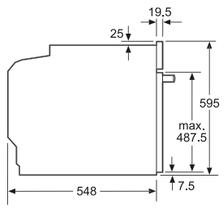

COMPACT OVENS WITH FULL STEAM

C18FT56H0B, C17FS32H0B

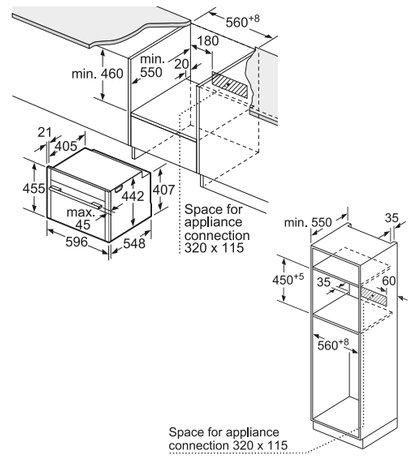

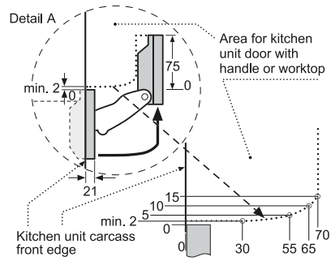

Hob type	min. worktop thicknes	
	fitted	flush
Induction hob	42 mm	43 mm
Full surface Induction hob	52 mm	53 mm
Gas hob	32 mm	43 mm
Electric hob	32 mm	35 mm

If the compact appliance will be installed underneath a hob, the following worktop thicknesses (including substructure if necessary) must be taken into acccount.

Installation with a hob.

For recessed depth, see hob dimensional drawing

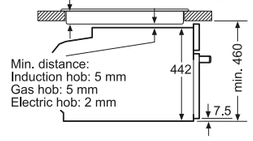

Note the pivoting range of the fascia.

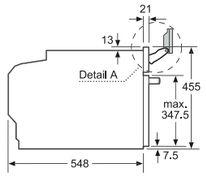

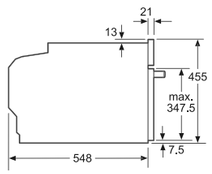

COMPACT OVENS

C27CS22H0B

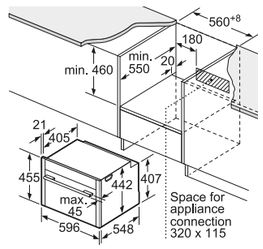

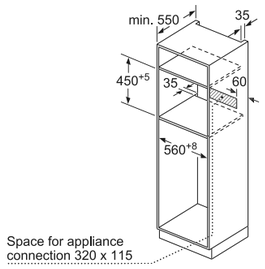

Hob type	min. worktop thickness	
	fitted	flush
Induction hob	42 mm	43 mm
Full surface Induction hob	52 mm	53 mm
Gas hob	32 mm	43 mm
Electric hob	32 mm	35 mm

If the compact appliance will be installed underneath a hob, the following worktop thicknesses (including substructure if necessary) must be taken into acccount.

Installation with a hob.

For recessed depth, see hob dimensional drawing

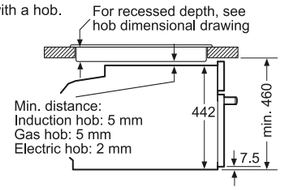

Note the pivoting range of the fascia.

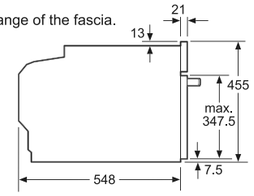

COMPACT OVENS WITH MICROWAVE & MICROWAVE COMBINATION OVENS

C17UR02N0B

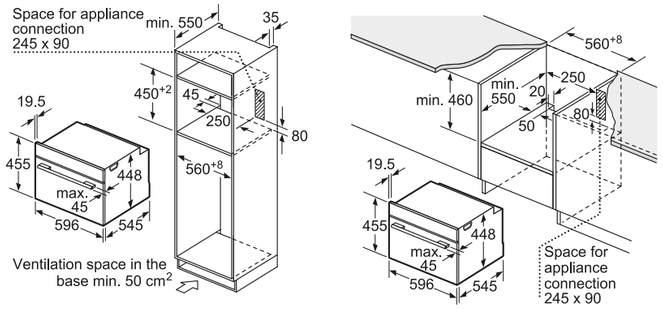

C28MT27H0B, C27MS22H0B, C17MS32H0B, C17MR02N0B

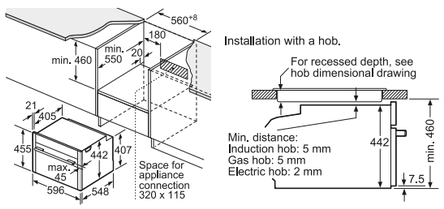

Installation with a hob.

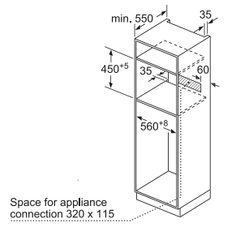

Note the pivoting range of the fascia.

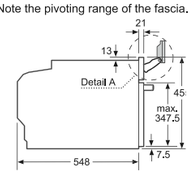

Hob type	min. worktop thickness	
	fitted	flush
Induction hob	42 mm	43 mm
Full surface Induction hob	52 mm	53 mm
Gas hob	32 mm	43 mm
Electric hob	32 mm	35 mm

If the compact appliance will be installed underneath a hob, the following worktop thicknesses (including substructure if necessary) must be taken into acccount.

C1APG64N0B

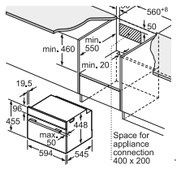

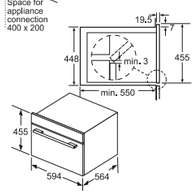

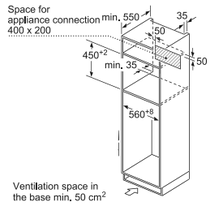

Note the pivoting range of the fascia.

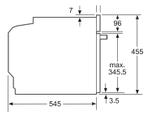

C1AMG84N0B

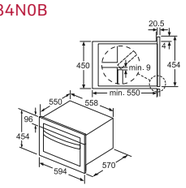

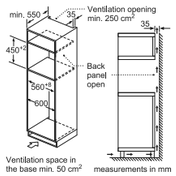

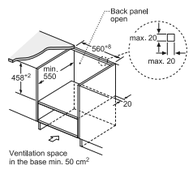

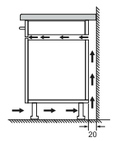

Measurements in mm. The line drawings featured in this brochure are provided as a guide to general dimensions only and are subject to amendment without prior notice.
For full dimensional and installation details please refer to the documentation supplied with the appliance.

MICROWAVE OVENS

C17GR00N0B, C17GR01N0B, C17WR00N0B, C17WR01N0B

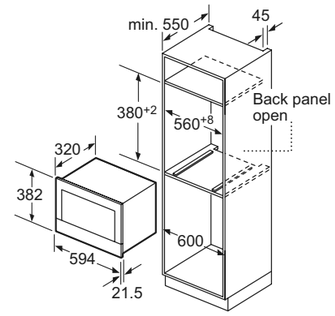

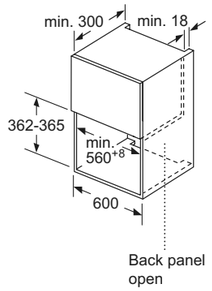

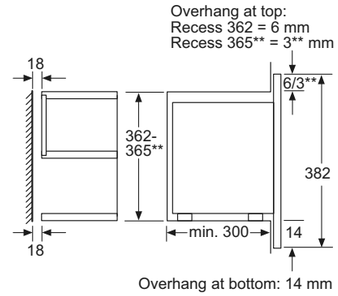

Not recommended for in-column installation with single or compact ovens.

HLAGD53N0B, HLAWD53N0B, HLAWD53W0B

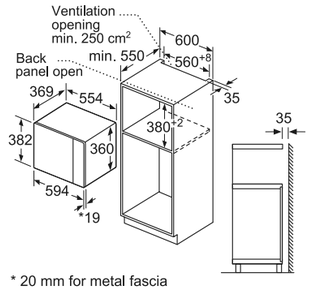

* 20 mm for metal fascia

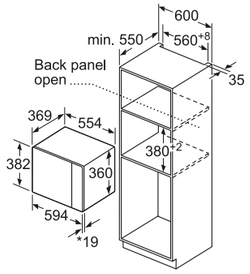

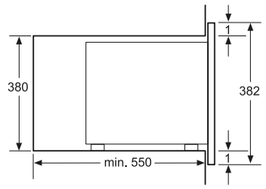

Microwave, corner installation

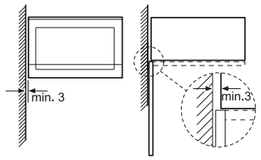

HLAWD23N0B

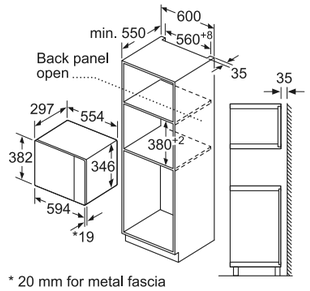

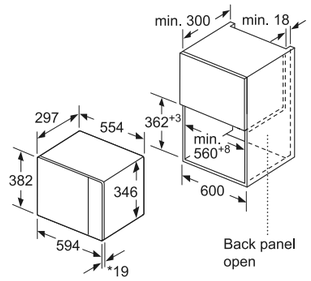

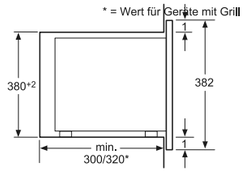

Microwave, corner installation

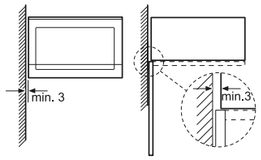

* 20 mm for metal fascia

H53W50N3GB

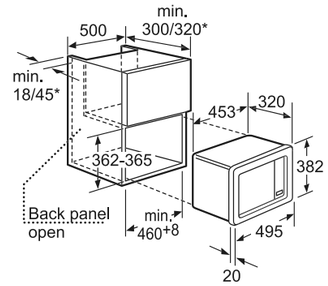

* = values for appliance with grill

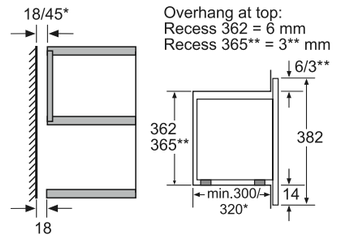

Overhang at bottom: = 14 mm
* = value for appliance with grill

Measurements in mm. The line drawings featured in this brochure are provided as a guide to general dimensions only and are subject to amendment without prior notice.
For full dimensional and installation details please refer to the documentation supplied with the appliance.

WARMING DRAWERS

N17HH20N0B

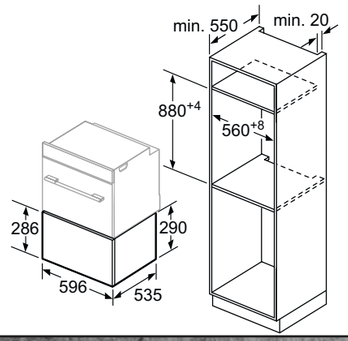

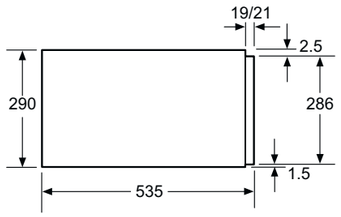

Ovens with an appliance height of 595 mm can be installed above a warming drawer.
An intermediate floor is not required.

N17HH10N0B , N17HH11N0B, N17ZH10N0

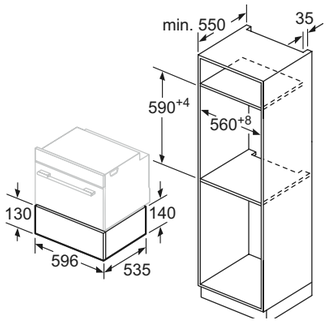

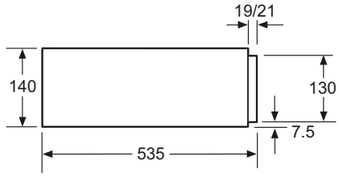

Compact ovens with an appliance height of 455 mm can be installed above a warming drawer.
An intermediate floor is not required.

N17XH10N0

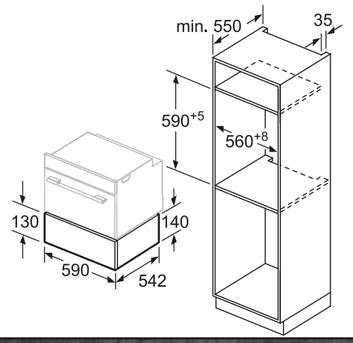

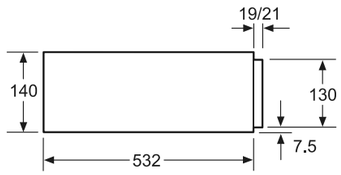

Compact ovens with an appliance height of 455 mm can be installed above a warming drawer.
An intermediate floor is not required.

N1AHA02N0B

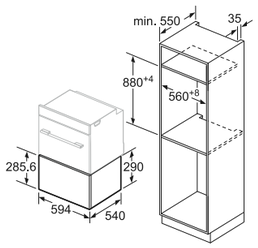

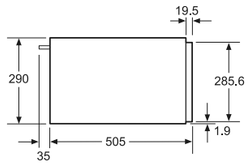

Ovens with an appliance height of 595 mm can be installed above a warming drawer.
An intermediate floor is not required.

N1AHA01N0B

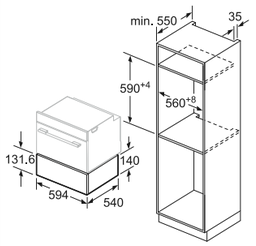

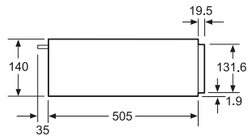

Compact ovens with an appliance height of 455 mm can be installed above a warming drawer.
An intermediate floor is not required.

Measurements in mm. The line drawings featured in this brochure are provided as a guide to general dimensions only and are subject to amendment without prior notice.
For full dimensional and installation details please refer to the documentation supplied with the appliance.

DOUBLE OVENS

U2ACM7HN0B, U2ACM7HH0B, U1ACI5HN0B,
U1ACE5HN0B, U1ACE2HN0B, U1ACE2HW0B

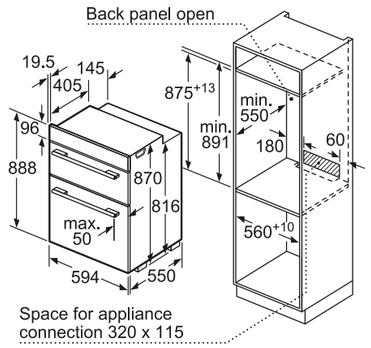

J1ACE4HN0B, J1ACE2HN0B

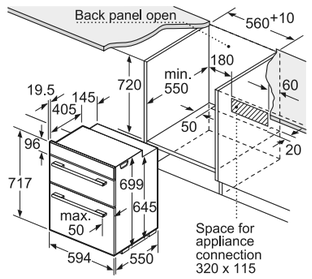

If the appliance will be installed underneath a hob, the following worktop thicknesses (including substructure if necessary) must be taken into account.

Hob type	min. worktop thickness	
	fitted	flush
Induction hob	39 mm	40 mm
Full surface induction hob	49 mm	50 mm
Gas hob	29 mm	36 mm
Electric hob	29 mm	32 mm

COFFEE MACHINE

C17KS61H0

Left corner installation

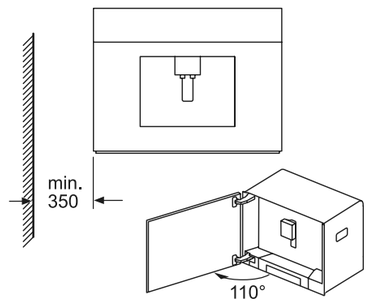

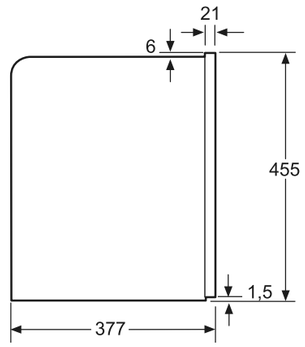

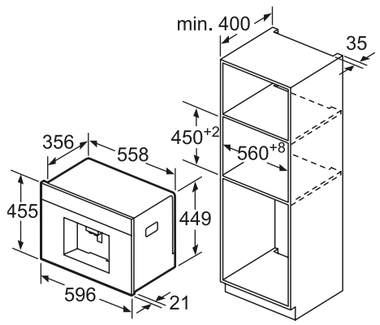

Bean and water containers are removed from the front.
Recommended installation height 95-145cm.

Measurements in mm. The line drawings featured in this brochure are provided as a guide to general dimensions only and are subject to amendment without prior notice.
For full dimensional and installation details please refer to the documentation supplied with the appliance.

VENTING HOBS

T58TL6EN2, T48TD7BN2

A: Minimum distance from the hob cut-out to the wall
B: Recessing depth
C: The worktop into which the hob is installed must withstand loads of approx. 60kg; suitable substructures must be used if required.
D: Cut-out in back panel required for pipework. Exact size and position can be taken from specific drawing.

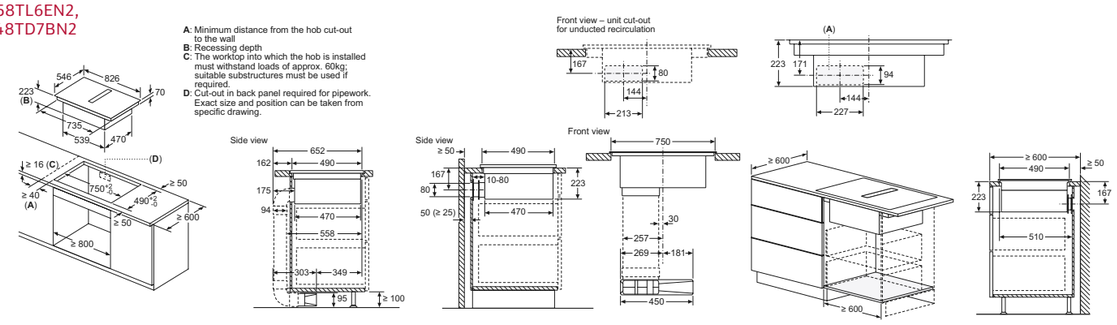

T47TD7BN2

A: Minimum distance from the hob cut-out to the wall
B: Recessing depth
C: The worktop into which the hob is installed must withstand loads of approx. 60kg; suitable substructures must be used if required.
D: Cut-out in back panel required for pipework. Exact size and position can be taken from specific drawing.

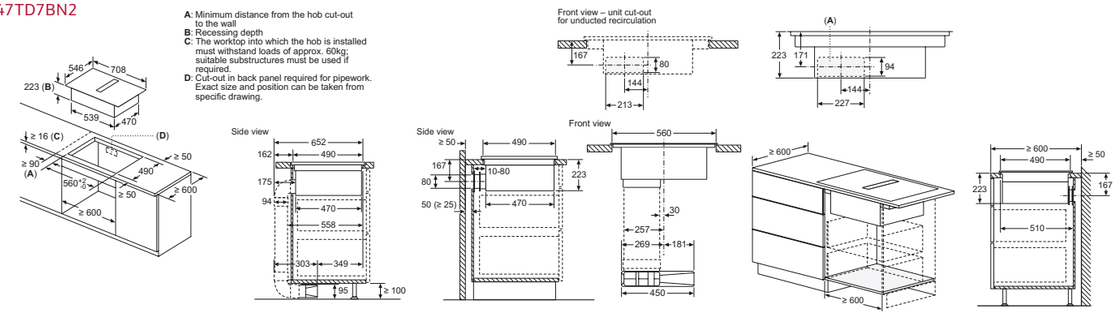

FLEX INDUCTION HOBS

T59TF6RN0, T59TS61N0, T59TS5RN0

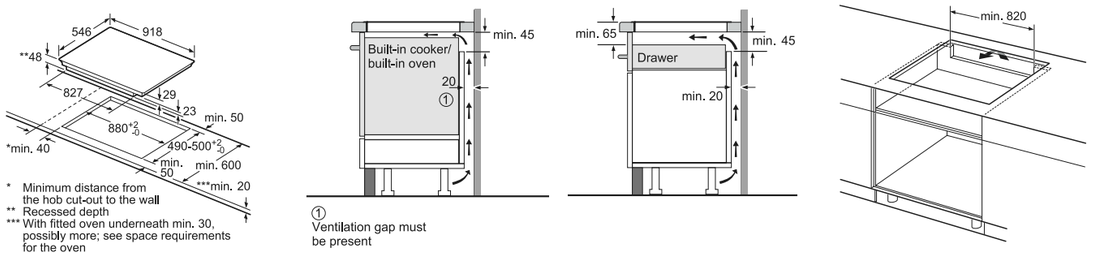

* Minimum distance from the hob cut-out to the wall
** Recessed depth
*** With fitted oven underneath min. 30, possibly more; see space requirements for the oven

① Ventilation gap must be present

T68TF6RN0, T68TS6RN0, T58TT20N0

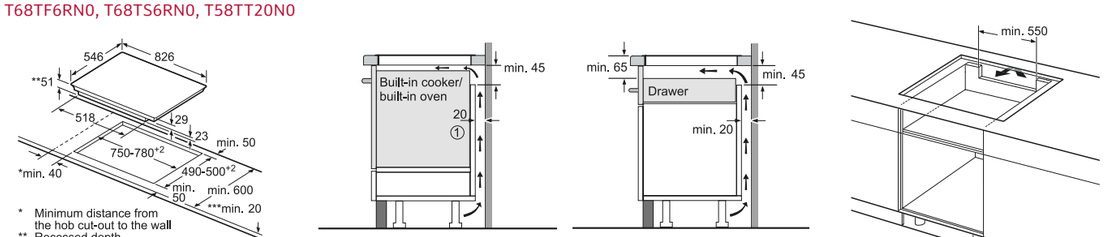

* Minimum distance from the hob cut-out to the wall
** Recessed depth
*** With fitted oven underneath min. 30, possibly more; see space requirements for the oven

① Ventilation gap must be present

Measurements in mm. The line drawings featured in this brochure are provided as a guide to general dimensions only and are subject to amendment without prior notice.
For full dimensional and installation details please refer to the documentation supplied with the appliance.

T66TS6RN0, T56TT60N0

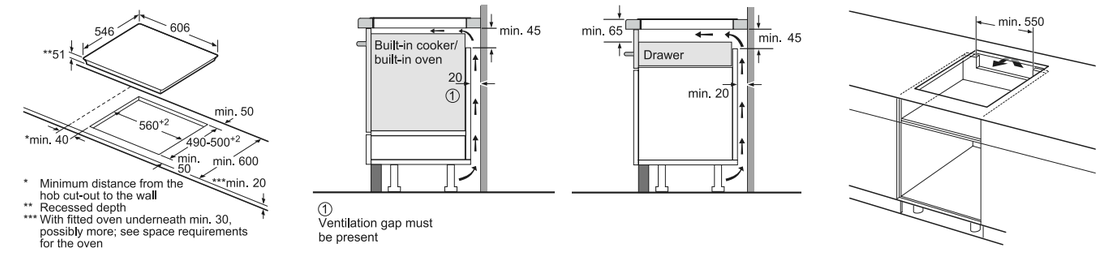

* Minimum distance from the hob cut-out to the wall
** Recessed depth
*** With fitted oven underneath min. 30, possibly more; see space requirements for the oven

① Ventilation gap must be present

T50FS41X0

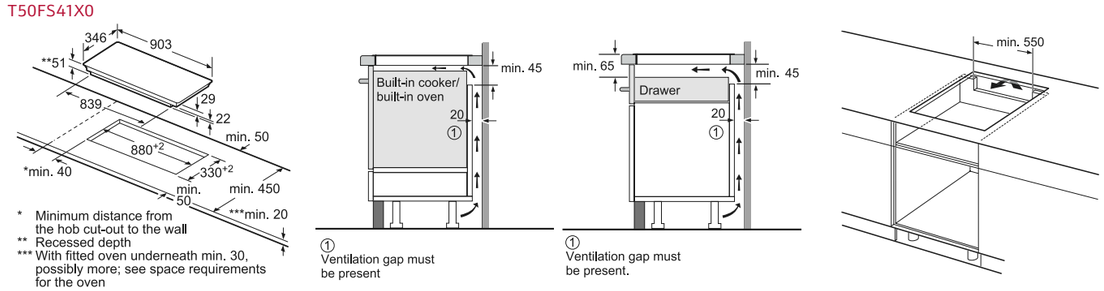

* Minimum distance from the hob cut-out to the wall
** Recessed depth
*** With fitted oven underneath min. 30, possibly more; see space requirements for the oven

① Ventilation gap must be present

① Ventilation gap must be present.

T59FT50X0

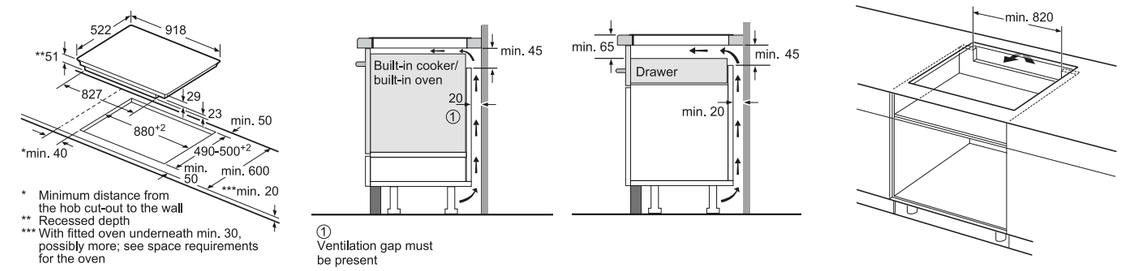

* Minimum distance from the hob cut-out to the wall
** Recessed depth
*** With fitted oven underneath min. 30, possibly more; see space requirements for the oven

① Ventilation gap must be present

T58FT20X0, T58FD20X0

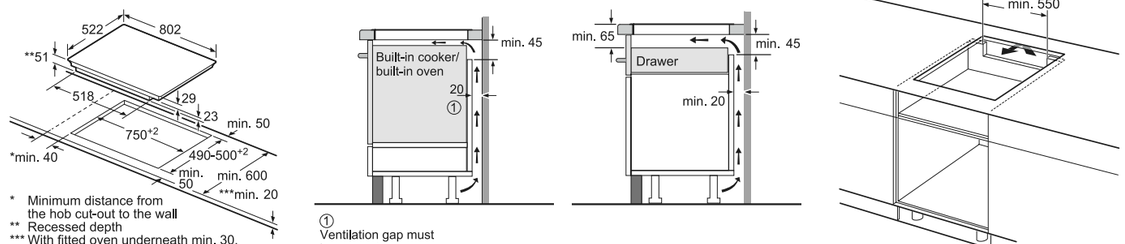

* Minimum distance from the hob cut-out to the wall
** Recessed depth
*** With fitted oven underneath min. 30, possibly more; see space requirements for the oven

① Ventilation gap must be present

T56FT60X0, T56FD50X0

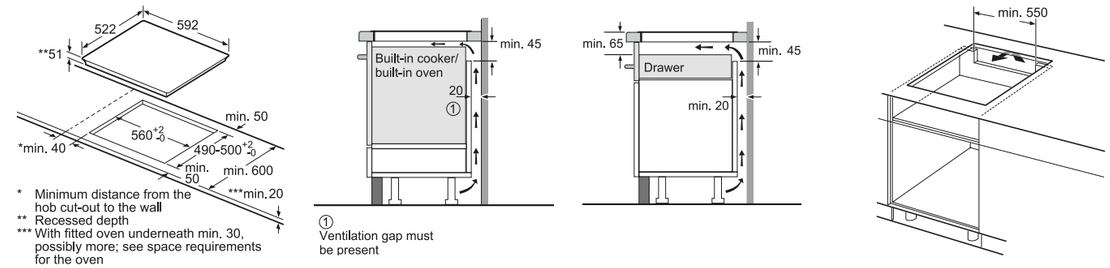

* Minimum distance from the hob cut-out to the wall
** Recessed depth
*** With fitted oven underneath min. 30, possibly more; see space requirements for the oven

① Ventilation gap must be present

Measurements in mm. The line drawings featured in this brochure are provided as a guide to general dimensions only and are subject to amendment without prior notice.
For full dimensional and installation details please refer to the documentation supplied with the appliance.

INDUCTION & CERAMIC HOBS

ALL INDUCTION HOBS USE ONE OF THESE LINE DRAWINGS

T48FD23X2
T46FD53X2
T36FB40X0
T36FB41X0G

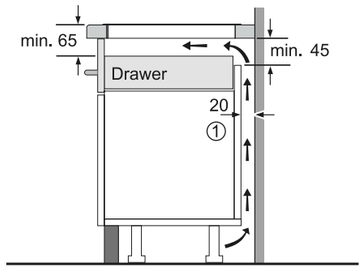

① Ventilation gap must be present.

T48PD23X2
T46PD53X2

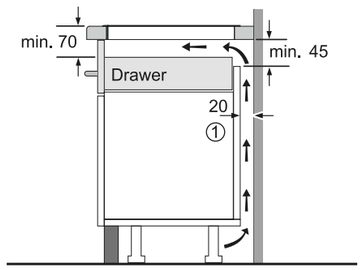

① Ventilation gap must be present.

ALL INDUCTION HOBS USE THESE LINE DRAWINGS
T48PD23X2, T46PD53X2, T48FD23X2, T46FD53X2, T36FB40X0, T36FB41X0G

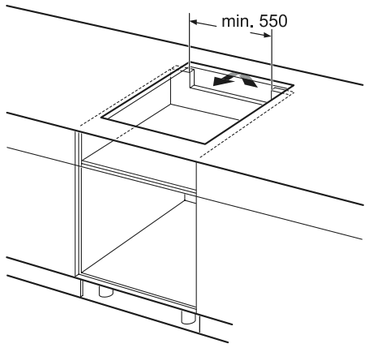

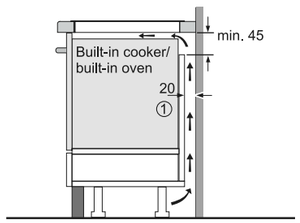

① Ventilation gap must be present

T48PD23X2

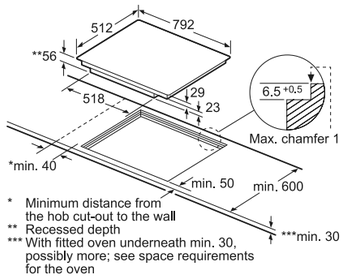

* Minimum distance from the hob cut-out to the wall
** Recessed depth
*** With fitted oven underneath min. 30, possibly more; see space requirements for the oven

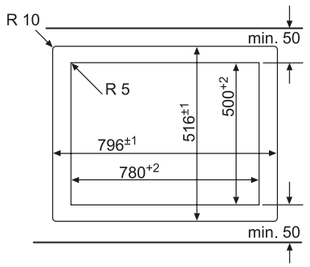

T46PD53X2

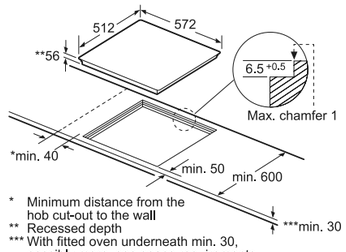

* Minimum distance from the hob cut-out to the wall
** Recessed depth
*** With fitted oven underneath min. 30, possibly more; see space requirements for the oven

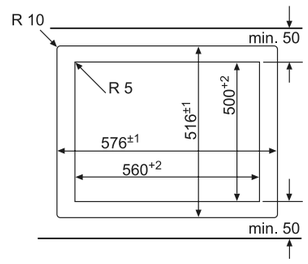

T48FD23X2

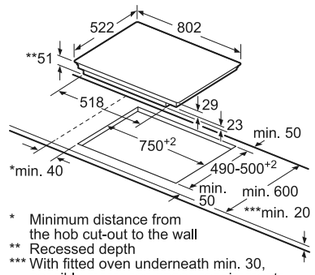

* Minimum distance from the hob cut-out to the wall
** Recessed depth
*** With fitted oven underneath min. 30, possibly more; see space requirements for the oven

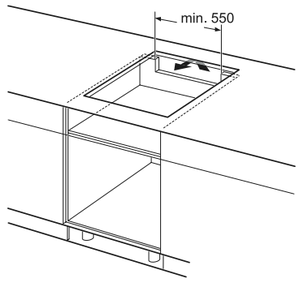

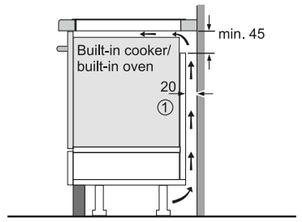

① Ventilation gap must be present

T46FD53X2, T36FB40X0, T36FB41X0G

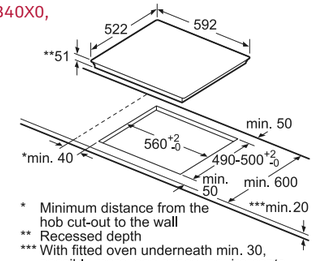

* Minimum distance from the hob cut-out to the wall
** Recessed depth
*** With fitted oven underneath min. 30, possibly more; see space requirements for the oven

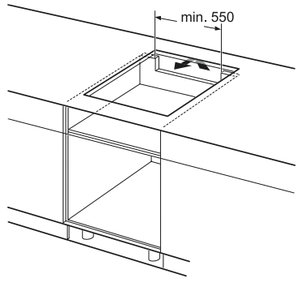

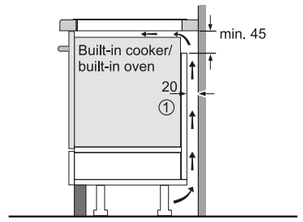

① Ventilation gap must be present

T18FD36X0

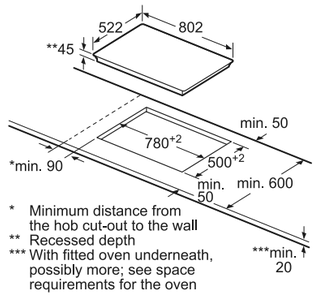

* Minimum distance from the hob cut-out to the wall
** Recessed depth
*** With fitted oven underneath, possibly more; see space requirements for the oven

T16FD56X0, T10B40X2, T16FK40X0

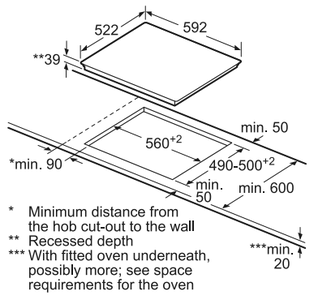

* Minimum distance from the hob cut-out to the wall
** Recessed depth
*** With fitted oven underneath, possibly more; see space requirements for the oven

Measurements in mm. The line drawings featured in this brochure are provided as a guide to general dimensions only and are subject to amendment without prior notice.
For full dimensional and installation details please refer to the documentation supplied with the appliance.

Measurements in mm. The line drawings featured in this brochure are provided as a guide to general dimensions only and are subject to amendment without prior notice.
For full dimensional and installation details please refer to the documentation supplied with the appliance.

DOMINO HOBS

N74TD00N0

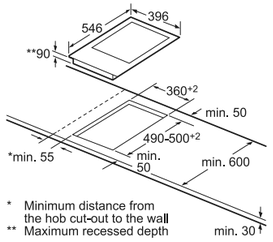

* Minimum distance from the hob cut-out to the wall
** Maximum recessed depth

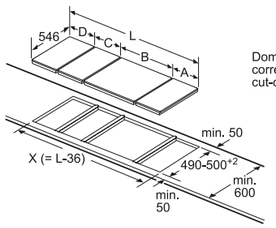

Domino combination options with corresponding appliance and cut-out dimensions

When installing several elements side by side, several assembly kits are also required (Z9914X0).

Cut-out dimensions (X) depending on the combination,

N13TD26N0

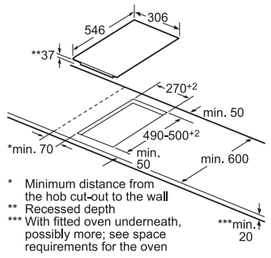

* Minimum distance from the hob cut-out to the wall
** Recessed depth
*** With fitted oven underneath, possibly more; see space requirements for the oven

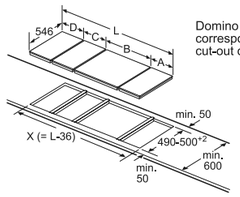

Domino combination options with corresponding appliance and cut-out dimensions

When installing several elements side by side, several assembly kits are also required (Z9914X0).

Cut-out dimensions (X) depending on the combination,

N53TD40N0

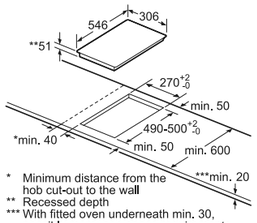

* Minimum distance from the hob cut-out to the wall
** Recessed depth
*** With fitted oven underneath min. 30, possibly more; see space requirements for the oven

Domino combination options with corresponding appliance and cut-out dimensions

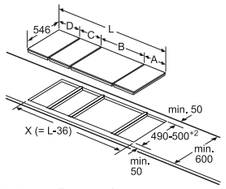

When installing several elements side by side, several assembly kits are also required (Z9914X0).

Cut-out dimensions (X) depending on the combination

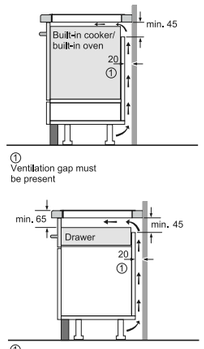

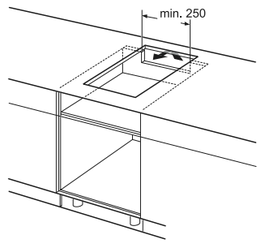

N23TA29N0

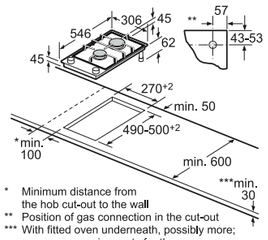

* Minimum distance from the hob cut-out to the wall
** Position of gas connection in the cut-out
*** With fitted oven underneath, possibly more; see space requirements for the oven

N23TA19N0

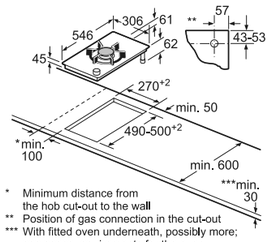

* Minimum distance from the hob cut-out to the wall
** Position of gas connection in the cut-out
*** With fitted oven underneath, possibly more; see space requirements for the oven

Measurements in mm. The line drawings featured in this brochure are provided as a guide to general dimensions only and are subject to amendment without prior notice.
For full dimensional and installation details please refer to the documentation supplied with the appliance.

GAS HOBS

T29TA79N0

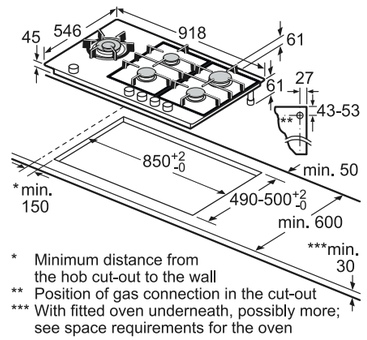

* Minimum distance from the hob cut-out to the wall
** Position of gas connection in the cut-out
*** With fitted oven underneath, possibly more; see space requirements for the oven

T27TA69N0

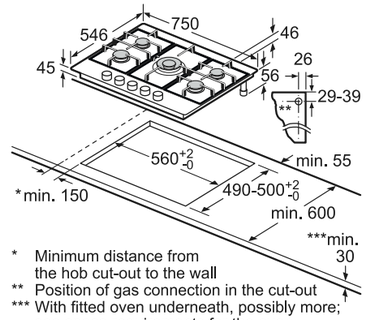

* Minimum distance from the hob cut-out to the wall
** Position of gas connection in the cut-out
*** With fitted oven underneath, possibly more; see space requirements for the oven

T26TA49N0, T26CA42S0

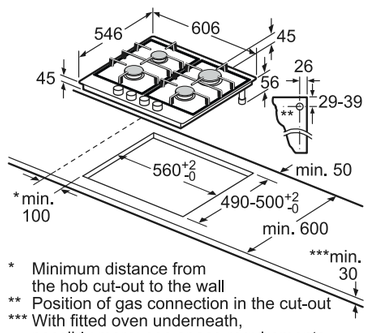

* Minimum distance from the hob cut-out to the wall
** Position of gas connection in the cut-out
*** With fitted oven underneath, possibly more; see space requirements for the oven

T27CA59S0, T27CS59S0

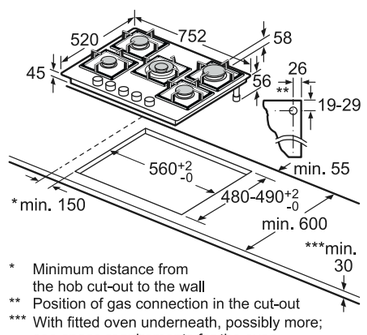

* Minimum distance from the hob cut-out to the wall
** Position of gas connection in the cut-out
*** With fitted oven underneath, possibly more; see space requirements for the oven

T26CS49S0

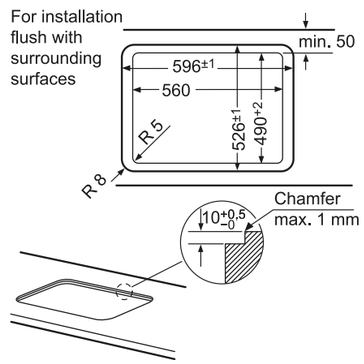

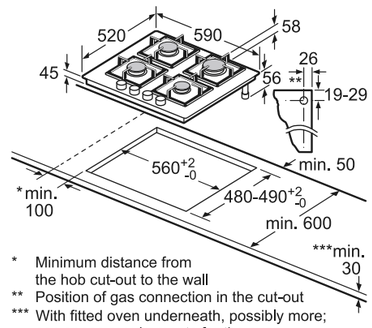

* Minimum distance from the hob cut-out to the wall
** Position of gas connection in the cut-out
*** With fitted oven underneath, possibly more; see space requirements for the oven

Measurements in mm. The line drawings featured in this brochure are provided as a guide to general dimensions only and are subject to amendment without prior notice.
For full dimensional and installation details please refer to the documentation supplied with the appliance.

GAS HOBS

T29DA69N0,
T29DS69N0

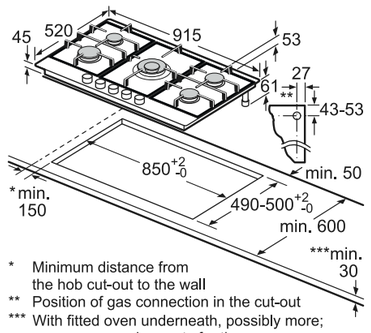

* Minimum distance from the hob cut-out to the wall
** Position of gas connection in the cut-out
*** With fitted oven underneath, possibly more; see space requirements for the oven

T27DA69N0,
T27DS79N0,
T27DS59N0,
T27DS59S0,
T27BB59N0

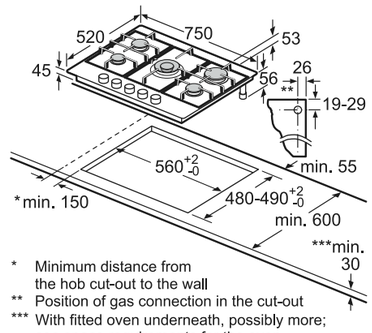

* Minimum distance from the hob cut-out to the wall
** Position of gas connection in the cut-out
*** With fitted oven underneath, possibly more; see space requirements for the oven

T26DA59N0,
T26DS59N0,
T26DS49N0,
T26DS49S0,
T26BB59N0

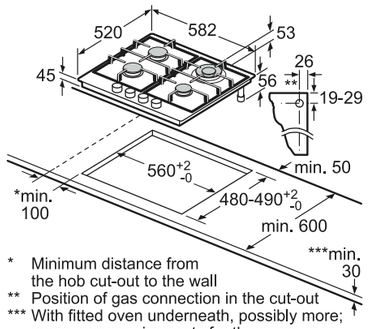

* Minimum distance from the hob cut-out to the wall
** Position of gas connection in the cut-out
*** With fitted oven underneath, possibly more; see space requirements for the oven

T26CB49S0

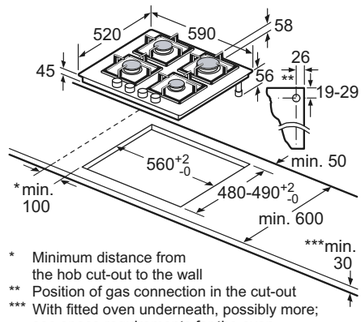

* Minimum distance from the hob cut-out to the wall
** Position of gas connection in the cut-out
*** With fitted oven underneath, possibly more; see space requirements for the oven

T26BR46N0, T26BR46S0, T26BR46W0

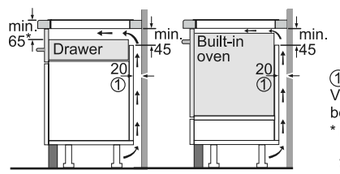

① Ventilation gap must be present
* Min. 70 for all induction hobs integrated flush with surrounding surfaces

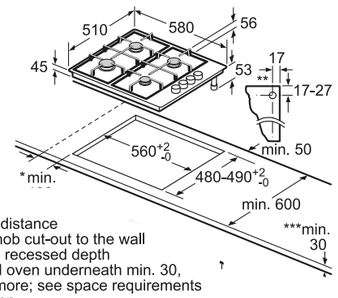

* Minimum distance from the hob cut-out to the wall
** Maximum recessed depth
*** With fitted oven underneath min. 30, possibly more; see space requirements for the oven.

Measurements in mm. The line drawings featured in this brochure are provided as a guide to general dimensions only and are subject to amendment without prior notice.
For full dimensional and installation details please refer to the documentation supplied with the appliance.

WORKTOP INSTALLATION HOODS

D95DAP8N0B

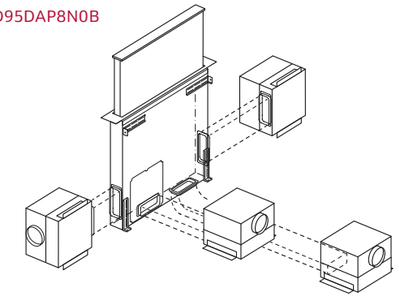

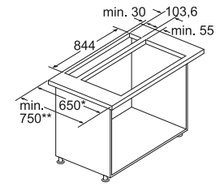

Use with gas hob only possible in air extraction mode.
Maximum total power 13.4 kW
* 650 mm depth only in combination with slim hobs.
** min. 750 mm for hobs with 500 mm cut-out depth.

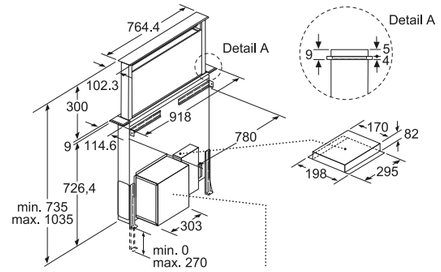

The motor unit can be turned on all of its four sides, fitted on the front or the rear or offset at a distance from the appliance. (Special accessory required)

Measurements in mm. The line drawings featured in this brochure are provided as a guide to general dimensions only and are subject to amendment without prior notice.
For full dimensional and installation details please refer to the documentation supplied with the appliance.

CEILING INSTALLATION HOODS

I97CPS8W5B, I95CBS8W0B, I95CAQ6N0B, I95CAQ6W0B

The fan outlet can be turned in all four directions

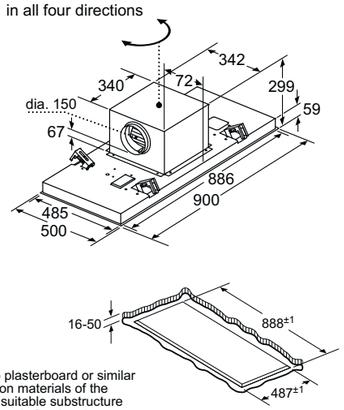

Never fit directly onto plasterboard or similar lightweight construction materials of the suspended ceiling. A suitable substructure is required that is securely fixed to the concrete ceiling.

Circulated air

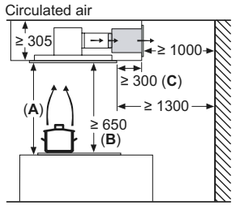

A: Optimum performance 700-1500
B: From upper edge of pan support
C: The distance can be reduced by up to 70 mm provided that the height of the suspended ceiling is ≥ 340 mm.

Air extraction

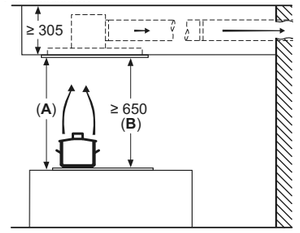

A: Optimum performance 700-1500
B: From upper edge of pan support

I25CBS8W0B

The fan outlet can be turned in all four directions

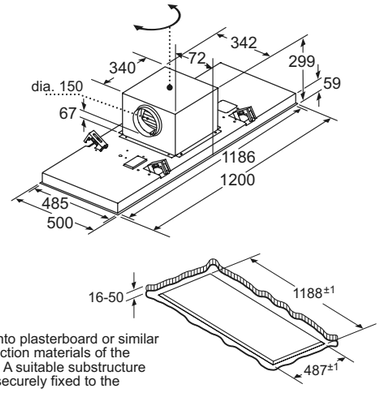

Never fit directly onto plasterboard or similar lightweight construction materials of the suspended ceiling. A suitable substructure is required that is securely fixed to the concrete ceiling.

Circulated air

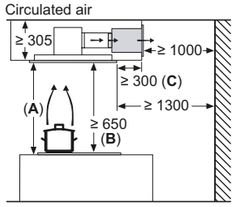

A: Optimum performance 700-1500
B: From upper edge of pan support
C: The distance can be reduced by up to 70 mm provided that the height of the suspended ceiling is ≥ 340 mm.

Air extraction

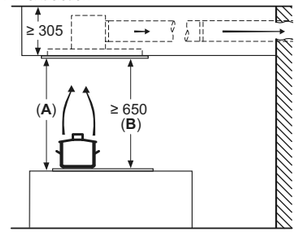

A: Optimum performance 700-1500
B: From upper edge of pan support

I94CAQ6N0B

The fan outlet can be turned in all four directions

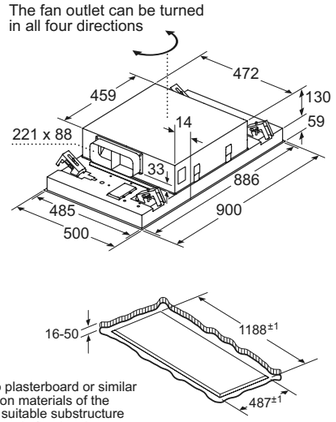

Never fit directly onto plasterboard or similar lightweight construction materials of the suspended ceiling. A suitable substructure is required that is securely fixed to the concrete ceiling.

Air recirculation

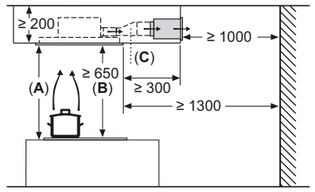

A: Optimum performance 700-1500
B: From upper edge of pan support
C: Connector (from a flat duct to a circular duct).
Not included in the scope of delivery.

Air extraction

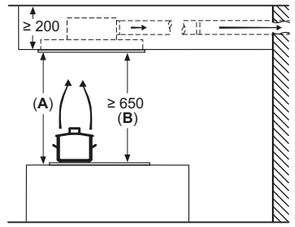

A: Optimum performance 700-1500
B: From upper edge of pan support

I95CAP6N1B

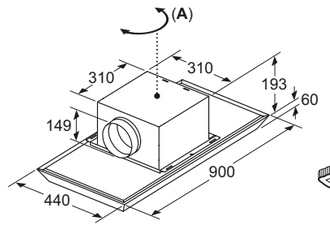

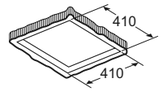

A: The fan outlet can be turned in all four directions

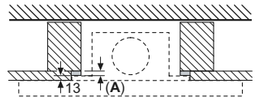

A: If required, even out the ceiling thickness to 13 mm using wooden spacers.

Exhaust air

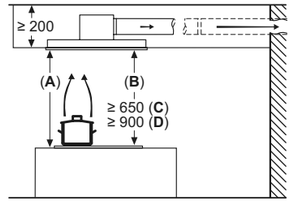

A: Optimum performance 700-1500
B: From upper edge of pan support
C: Electric
D: Gas

Circulated air

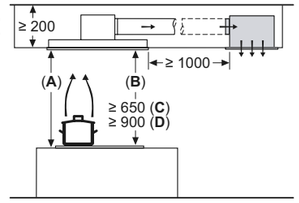

A: Optimum performance 700-1500
B: From upper edge of pan support
C: Electric
D: Gas

I14RBQ8W0

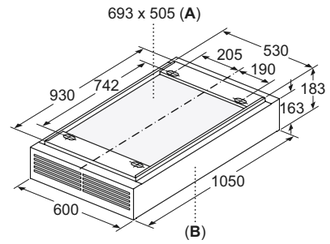

A: Area for cable outlet on the ceiling
B: Front of appliance

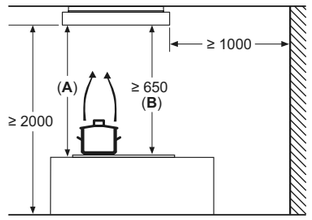

A: Optimum performance up to 1500 mm
B: From upper edge of pan support

ISLAND HOODS

I96BMV5N5B, I96BMP5N0B

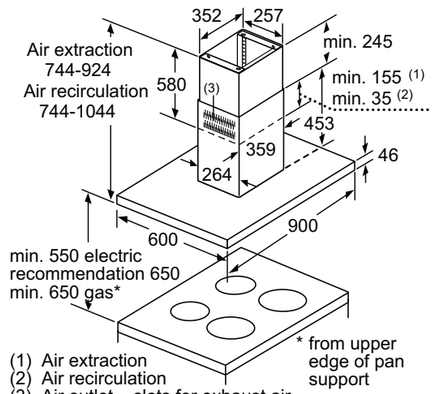

I95GBE2N0B

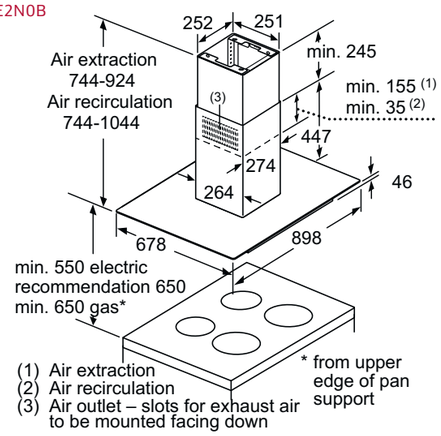

Measurements in mm. The line drawings featured in this brochure are provided as a guide to general dimensions only and are subject to amendment without prior notice.
For full dimensional and installation details please refer to the documentation supplied with the appliance.

Measurements in mm. The line drawings featured in this brochure are provided as a guide to general dimensions only and are subject to amendment without prior notice.
For full dimensional and installation details please refer to the documentation supplied with the appliance.

WALL INSTALLATION HOODS

D96IKW1S0B

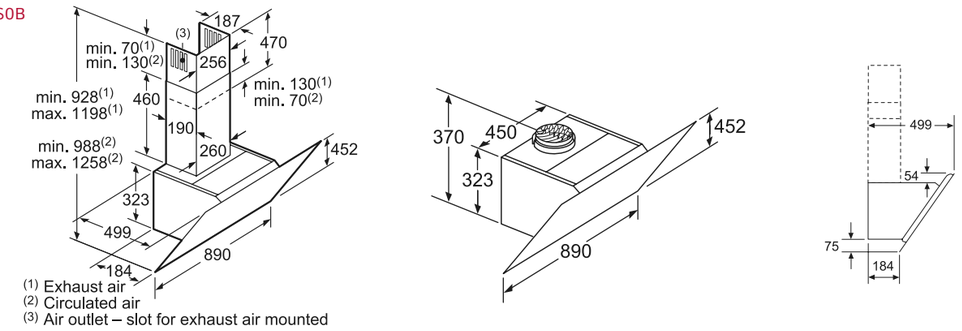

(1) Exhaust air
(2) Circulated air
(3) Air outlet – slot for exhaust air mounted

D95IMT1N0B

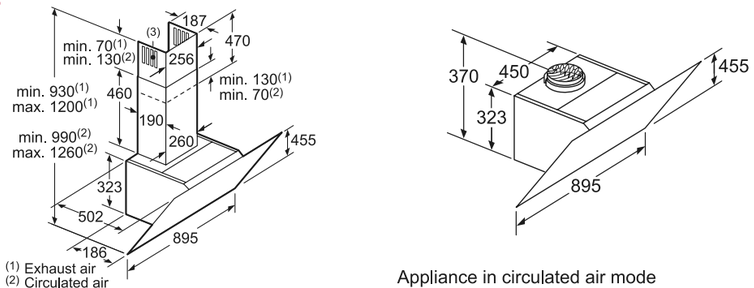

(1) Exhaust air
(2) Circulated air
(3) Air outlet – slot for exhaust air to be mounted facing down

Appliance in circulated air mode without duct
Circulated air set required

D95IHM1S0B, D65IHM1S0B

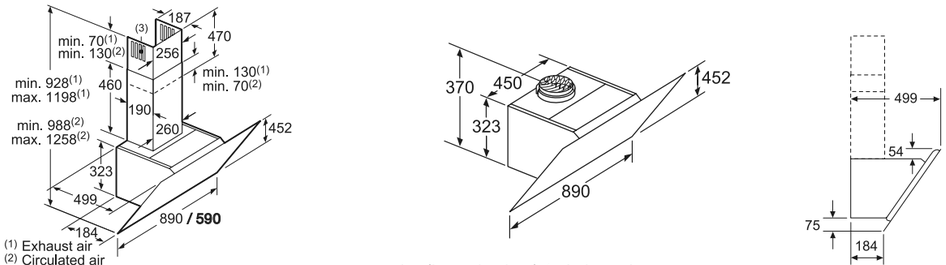

(1) Exhaust air
(2) Circulated air
(3) Air outlet – slot for exhaust air mounted facing down

Appliance in circulated air mode without duct
Circulated air set required

D85IEE1S0B, D65IEE1S0B

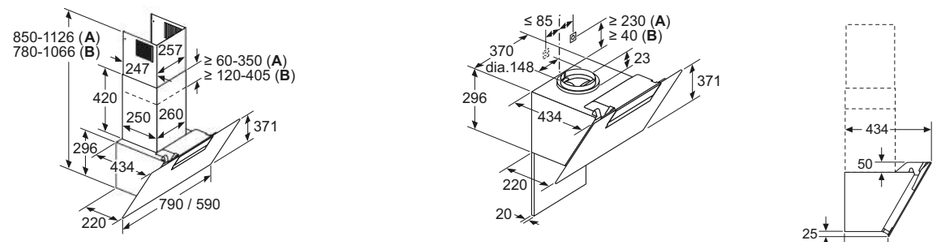

A: Circulated air
B: Exhaust air – slots to be mounted facing down

A: Integrated Clean Air
B: Exhaust air or standard circulated air set

Note the maximum thickness of the back panel.

Measurements in mm. The line drawings featured in this brochure are provided as a guide to general dimensions only and are subject to amendment without prior notice.
For full dimensional and installation details please refer to the documentation supplied with the appliance.

D95FMW1N0B

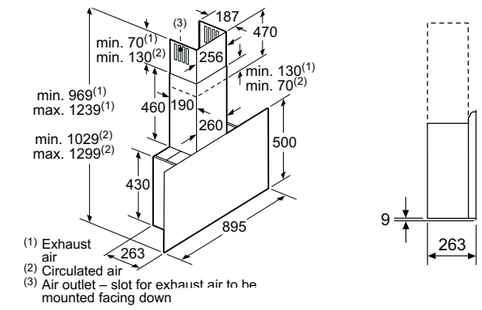

(1) Exhaust air
(2) Circulated air
(3) Air outlet – slot for exhaust air to be mounted facing down

D95FRM1S0B

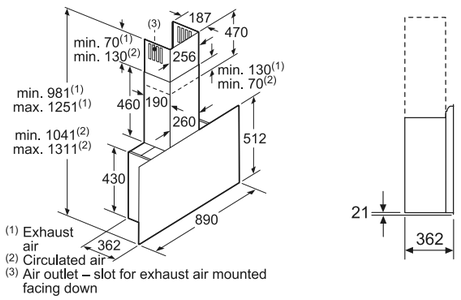

(1) Exhaust air
(2) Circulated air
(3) Air outlet – slot for exhaust air mounted facing down

GLASS CHIMNEY HOODS

D94AFM1N0B

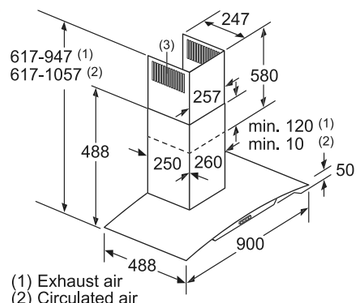

(1) Exhaust air
(2) Circulated air
(3) Air outlet – slots for exhaust air to be mounted facing down

D64AFM1N0B

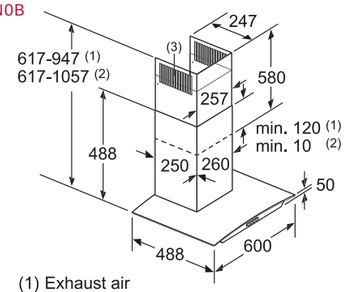

(1) Exhaust air
(2) Circulated air
(3) Air outlet – slots for exhaust air to be mounted facing down

D94ABC0N0B

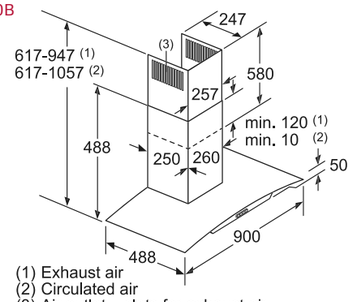

(1) Exhaust air
(2) Circulated air
(3) Air outlet – slots for exhaust air to be mounted facing down

D64ABC0N0B

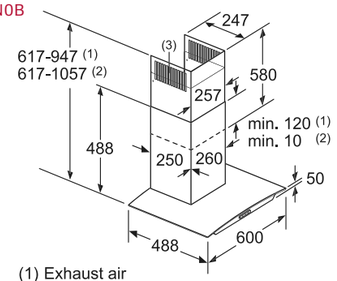

(1) Exhaust air
(2) Circulated air
(3) Air outlet – slots for exhaust air to be mounted facing down

D94GBC0N0B

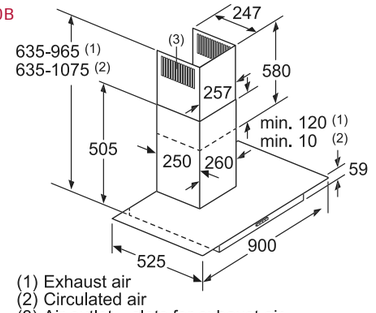

(1) Exhaust air
(2) Circulated air
(3) Air outlet – slots for exhaust air to be mounted facing down

D64GBC0N0B

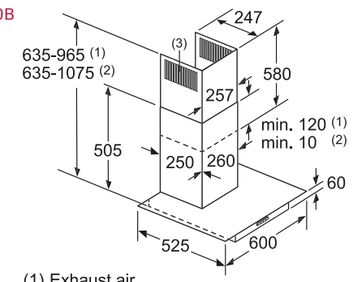

(1) Exhaust air
(2) Circulated air
(3) Air outlet – slots for exhaust air to be mounted facing down

Measurements in mm. The line drawings featured in this brochure are provided as a guide to general dimensions only and are subject to amendment without prior notice.
For full dimensional and installation details please refer to the documentation supplied with the appliance.

BOX CHIMNEY HOODS

D96BMV5N5B

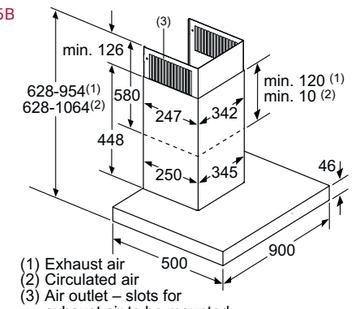

(1) Exhaust air
(2) Circulated air
(3) Air outlet – slots for exhaust air to be mounted facing down

D95BMP5N0B

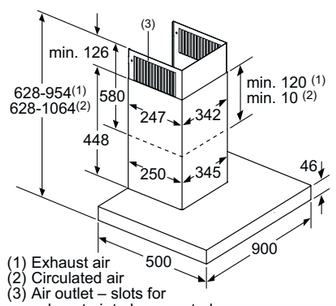

(1) Exhaust air
(2) Circulated air
(3) Air outlet – slots for exhaust air to be mounted facing down

D65BMP5N0B

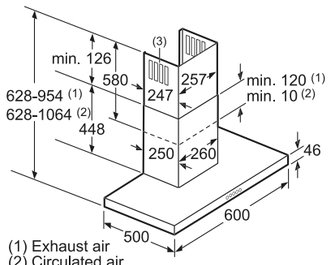

(1) Exhaust air
(2) Circulated air
(3) Air outlet – slots for exhaust air to be mounted facing down

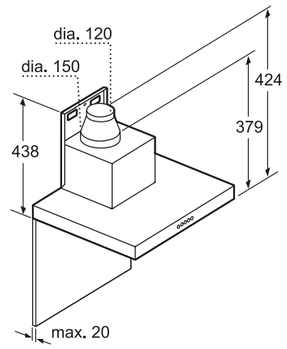

D94BHM1N0B, D92BBC0N0B

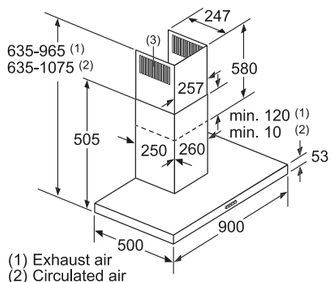

(1) Exhaust air
(2) Circulated air
(3) Air outlet – slots for exhaust air to be mounted facing down

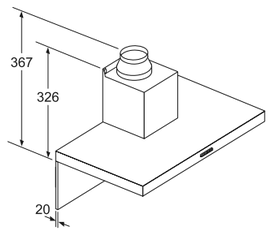

If a back panel is used, the design of the appliance must be considered.

D64BHM1N0B, D62BBC0N0B

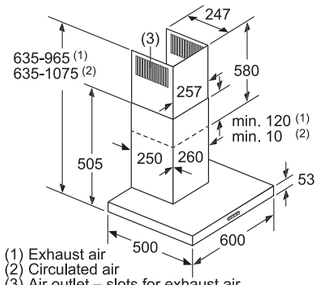

(1) Exhaust air
(2) Circulated air
(3) Air outlet – slots for exhaust air to be mounted facing down

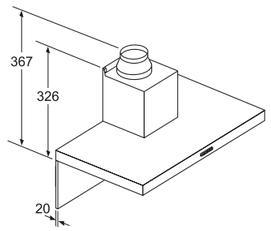

If a back panel is used, the design of the appliance must be considered.

PYRAMID CHIMNEY HOODS

D94QFM1N0B, D92QBC0N0B

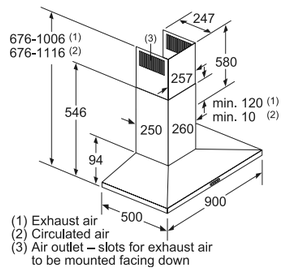

(1) Exhaust air
(2) Circulated air
(3) Air outlet – slots for exhaust air to be mounted facing down

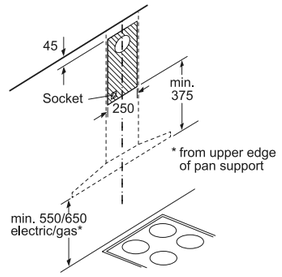

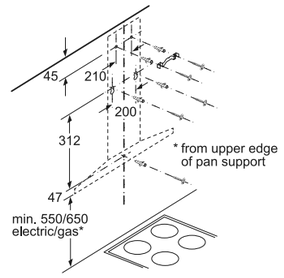

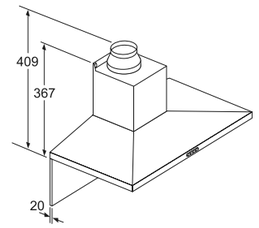

If a back panel is used, the design of the appliance must be considered.

D64QFM1N0B, D62QBC0N0B

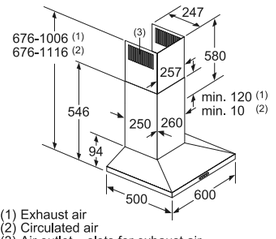

(1) Exhaust air
(2) Circulated air
(3) Air outlet – slots for exhaust air to be mounted facing down

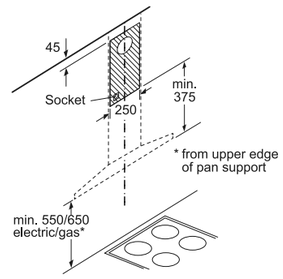

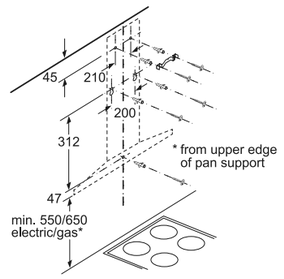

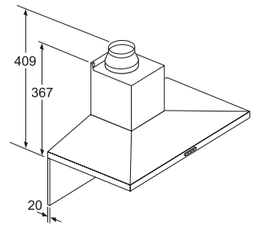

If a back panel is used, the design of the appliance must be considered.

D92PBC0N0B

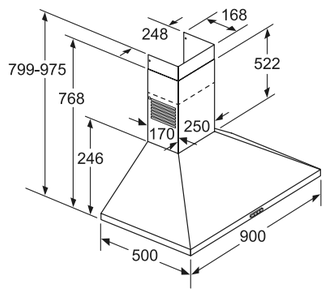

D72PBC0N0B

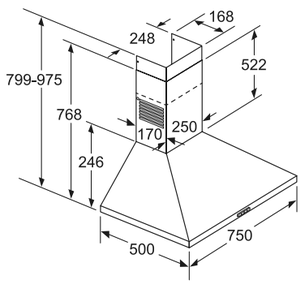

D62PBC0N0B

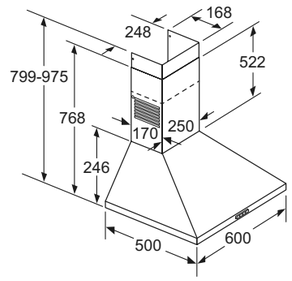

D92PBC0N0B, D72PBC0N0B, D62PBC0N0B

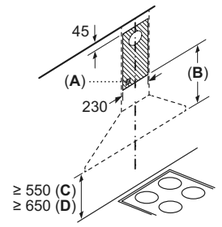

A: Socket
B: Exhaust air: ≥ 280; circulated air: ≥ 490
C: electric
D: Gas, from upper edge of pan support

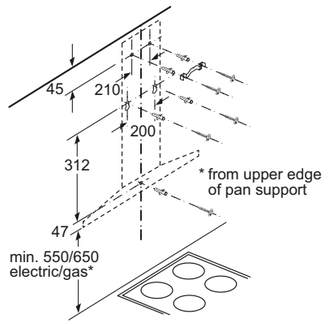

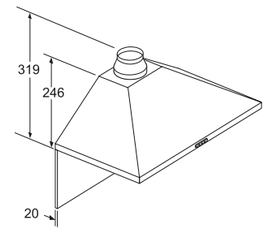

If a back panel is used, the design of the appliance must be considered.

Measurements in mm. The line drawings featured in this brochure are provided as a guide to general dimensions only and are subject to amendment without prior notice.
For full dimensional and installation details please refer to the documentation supplied with the appliance.

Measurements in mm. The line drawings featured in this brochure are provided as a guide to general dimensions only and are subject to amendment without prior notice.
For full dimensional and installation details please refer to the documentation supplied with the appliance.

TELESCOPIC HOODS

D49PU54X0B, D49ML54N0B

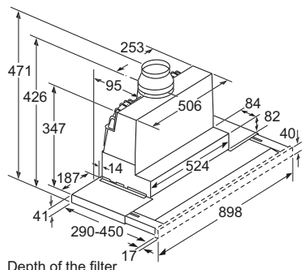

Depth of the filter drawer can be adjusted by up to 29 mm

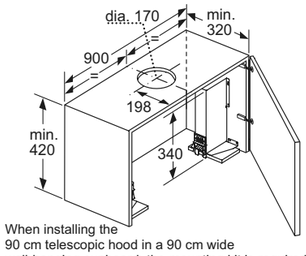

When installing the 90 cm telescopic hood in a 90 cm wide wall-hanging cupboard, the mounting kit is required. The two mounting brackets are screwed onto the right and left of the kitchen unit. Installation in accordance with template.

D46ML54N0B

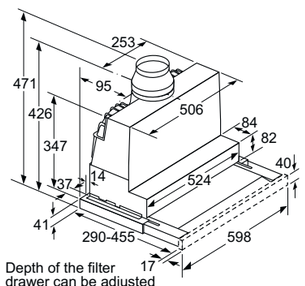

Depth of the filter drawer can be adjusted by up to 29 mm

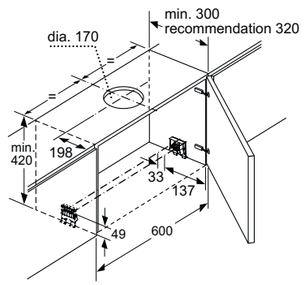

D49ED22N0B

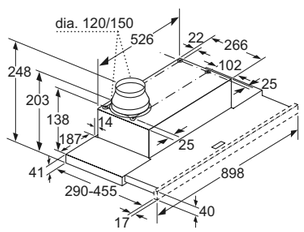

Depth of the filter drawer can be adjusted by up to 29 mm

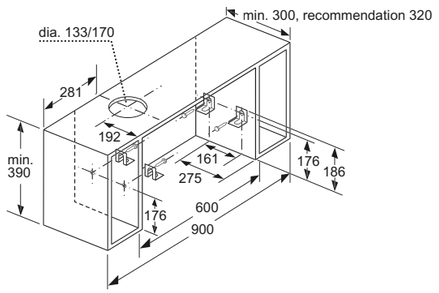

D46ED22N0B, D46BR22N0B

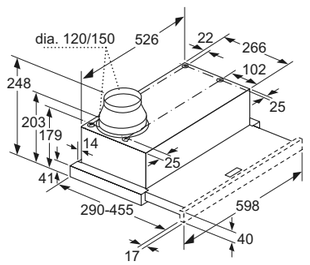

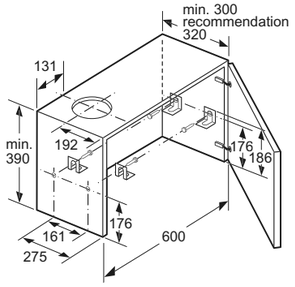

Measurements in mm. The line drawings featured in this brochure are provided as a guide to general dimensions only and are subject to amendment without prior notice.
For full dimensional and installation details please refer to the documentation supplied with the appliance.

CANOPY HOODS

D57ML67N1B, D57MH56N0B

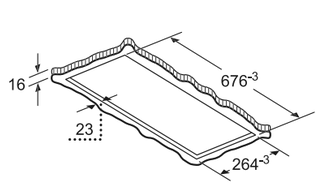

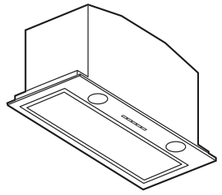

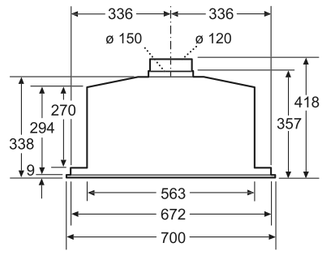

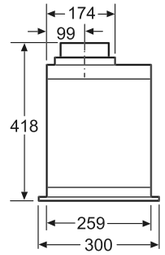

D55MH56N0B

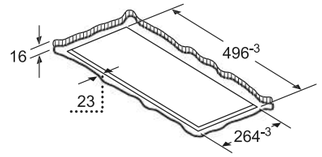

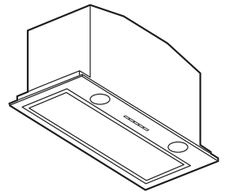

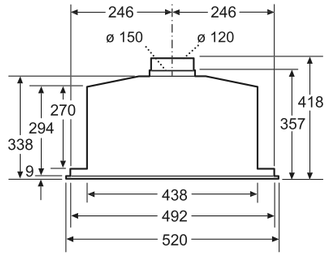

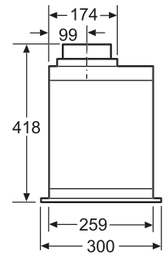

D94XAF8N0B

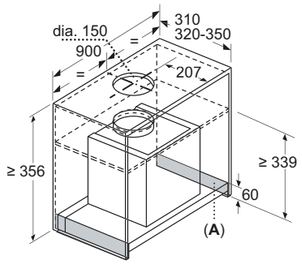

A: Area without hinge

front view

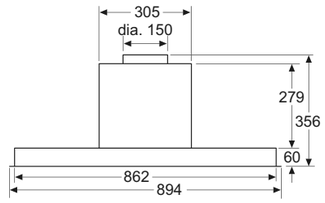

side view

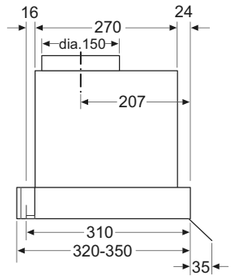

D64XAF8N0B

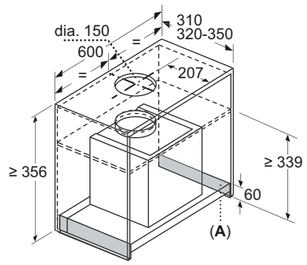

A: Area without hinge

front view

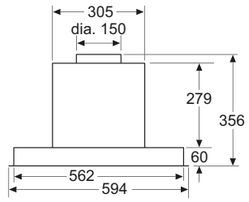

side view

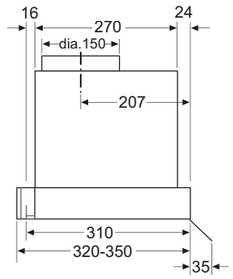

Measurements in mm. The line drawings featured in this brochure are provided as a guide to general dimensions only and are subject to amendment without prior notice.
For full dimensional and installation details please refer to the documentation supplied with the appliance.

CANOPY HOODS

D5855X1GB

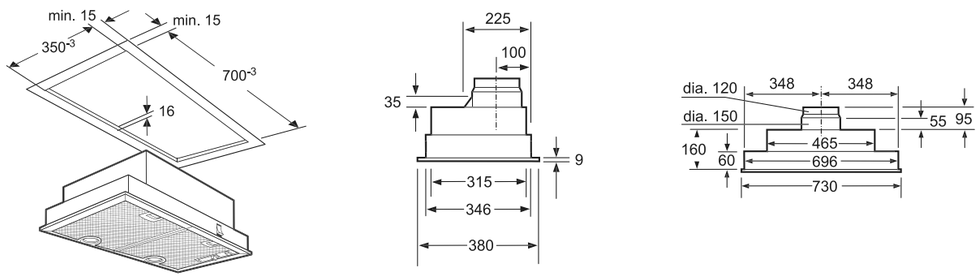

D5655X1GB

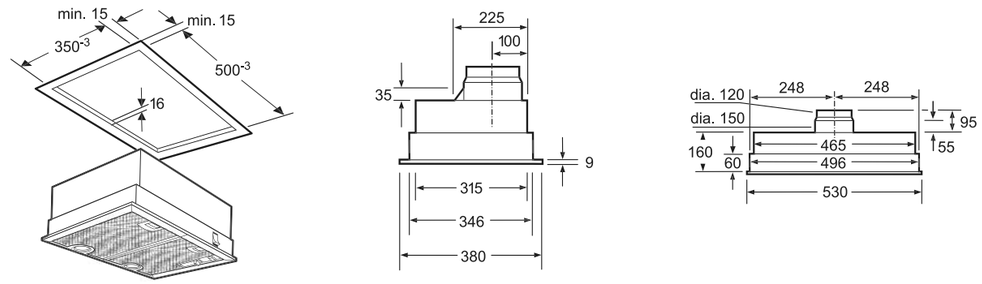

D51NAA1C0B

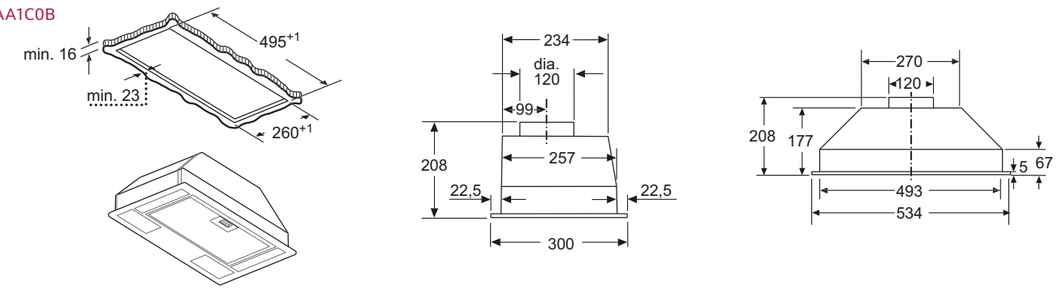

INTEGRATED HOODS

D64MAC1X0B, D61MAC1X0B

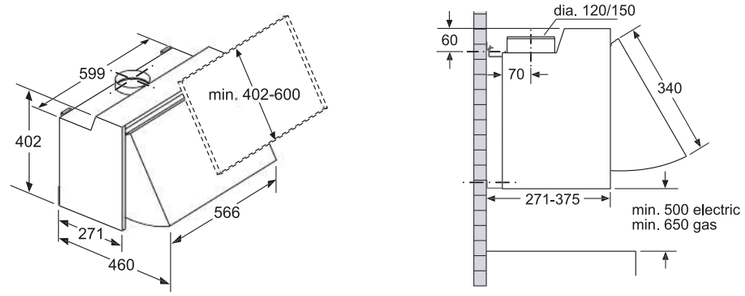

Measurements in mm. The line drawings featured in this brochure are provided as a guide to general dimensions only and are subject to amendment without prior notice.
For full dimensional and installation details please refer to the documentation supplied with the appliance.

AMERICAN-STYLE FRIDGE FREEZERS

KA3923IE0G

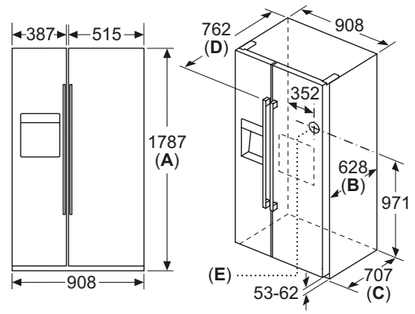

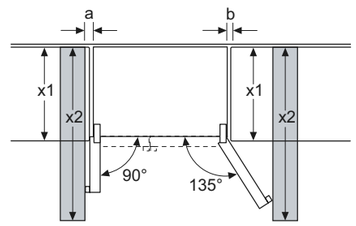

x 1 (unit depth)	a	b
600	0	0
650	20	25
700	20	76

x 2 (wall)

	Specifications
A	Front is adjustable from 1783 to 1792
B	Cabinet depth
C	Depth incl. door, without handle
D	Depth incl. door, with handle
E	Water connection to the appliance

KA3902B20G

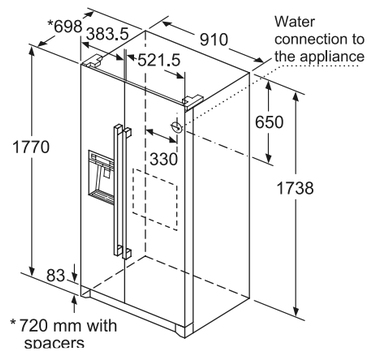

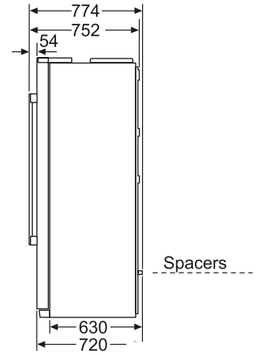

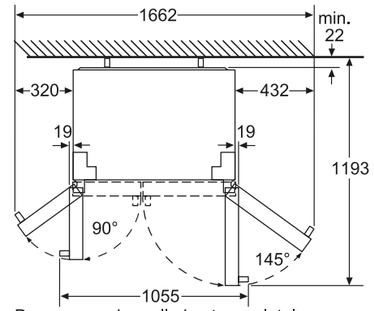

Drawers can be pulled out completely when the door is open 145°.

Measurements in mm. The line drawings featured in this brochure are provided as a guide to general dimensions only and are subject to amendment without prior notice.
For full dimensional and installation details please refer to the documentation supplied with the appliance.

BUILT-IN FRIDGE FREEZERS

KI8865DE0, KI7863DF0G

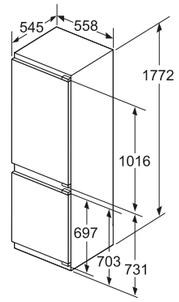

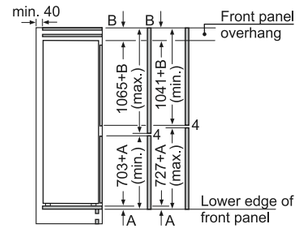

The specified unit door dimensions are valid for a door gap of 4 mm.

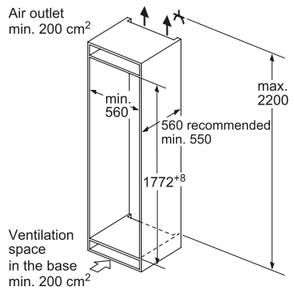

KI7853DE0G

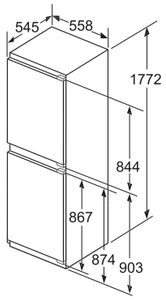

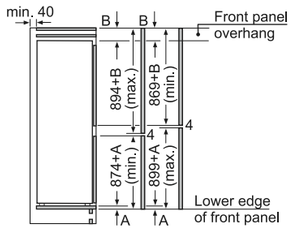

The specified unit door dimensions are valid for a door gap of 4 mm.

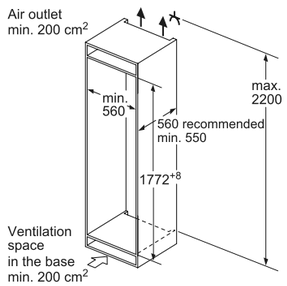

KI7862FF0G, KI6863FE0G

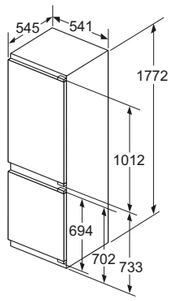

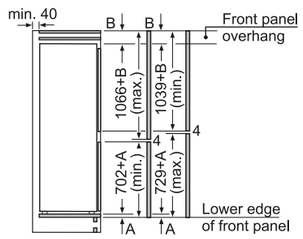

The specified unit door dimensions are valid for a door gap of 4 mm.

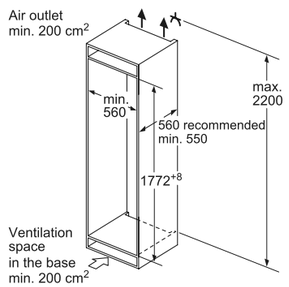

KI7862SF0G

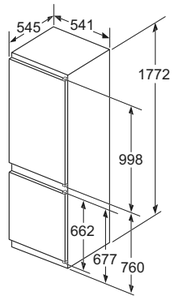

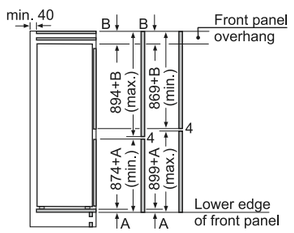

The specified unit door dimensions are valid for a door gap of 4 mm.

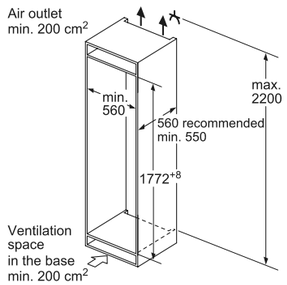

Measurements in mm. The line drawings featured in this brochure are provided as a guide to general dimensions only and are subject to amendment without prior notice.
For full dimensional and installation details please refer to the documentation supplied with the appliance.

KI6873FE0G, KI5872FF0G

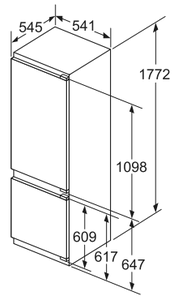

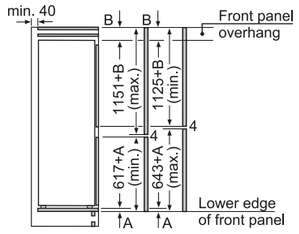

The specified unit door dimensions are valid for a door gap of 4 mm.

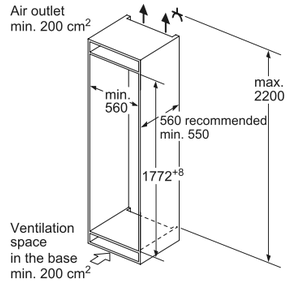

KI5872SF0G

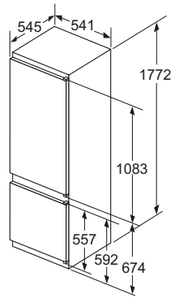

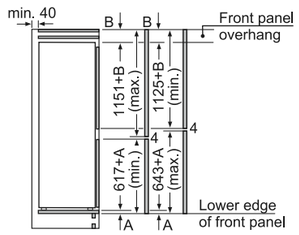

The specified unit door dimensions are valid for a door gap of 4 mm.

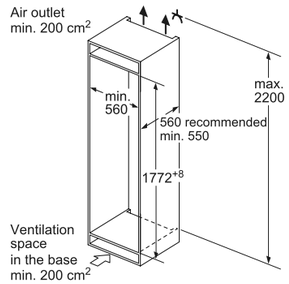

KI5852FF0G

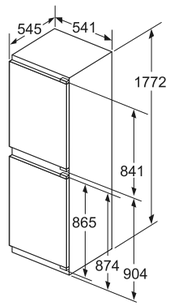

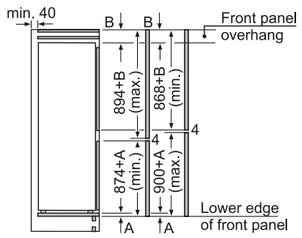

The specified unit door dimensions are valid for a door gap of 4 mm.

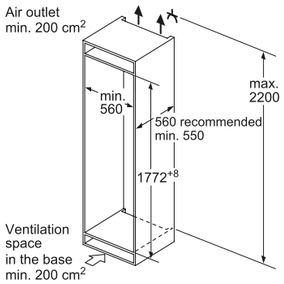

KI5862SF0G

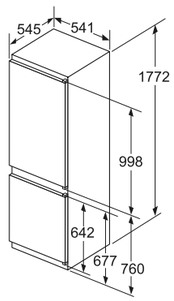

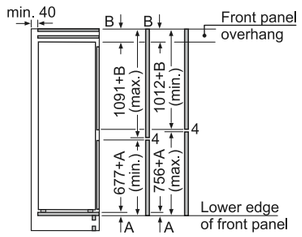

The specified unit door dimensions are valid for a door gap of 4 mm.

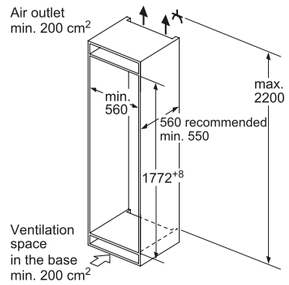

Measurements in mm. The line drawings featured in this brochure are provided as a guide to general dimensions only and are subject to amendment without prior notice.
For full dimensional and installation details please refer to the documentation supplied with the appliance.

BUILT-IN FRIDGE FREEZERS

KI5852SF0G

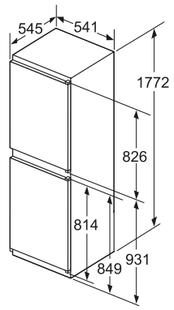

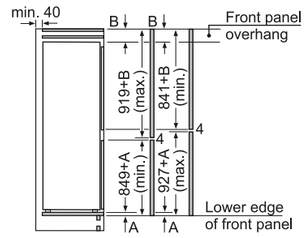

The specified unit door dimensions are valid for a door gap of 4 mm.

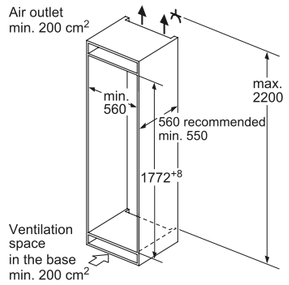

KI5871SF0G

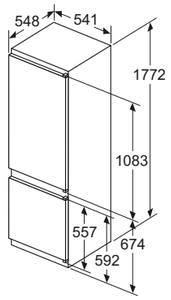

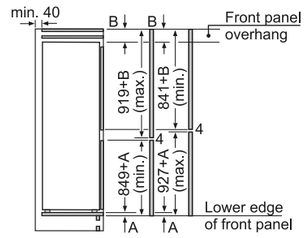

The specified unit door dimensions are valid for a door gap of 4 mm.

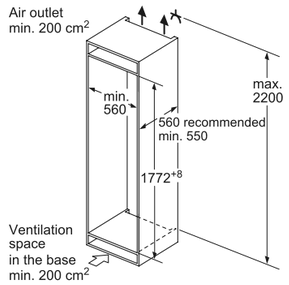

K8524X8GB

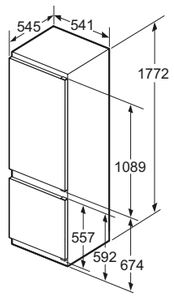

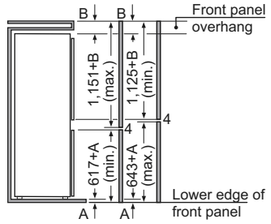

The specified unit door dimensions are valid for a door gap of 4 mm. If a different gap width is used (max. 14 mm), the dimensions must be adjusted.

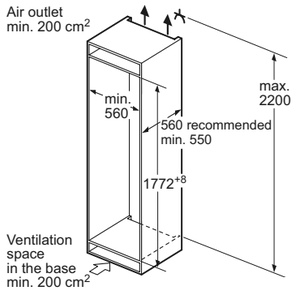

BUILT-IN SINGLE DOOR FRIDGES & FREEZERS

177CM
KI8816DE0, KI2823FF0G, KI1813FE0G, GI7815CE0G, GI7813EF0G

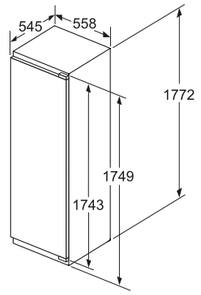

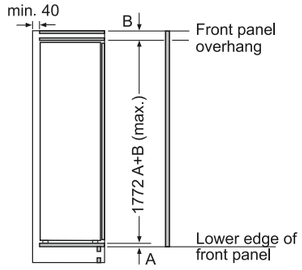

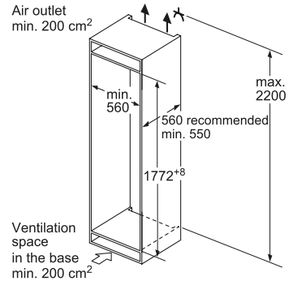

177CM
KI2822SF0G, KI1812SF0G

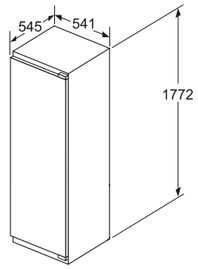

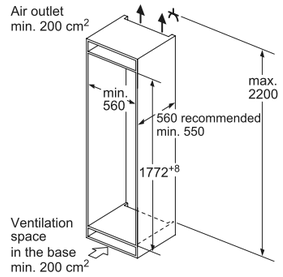

140CM
KI1513FF0

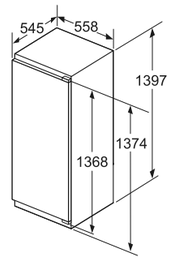

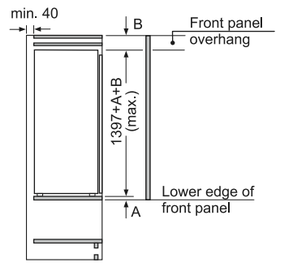

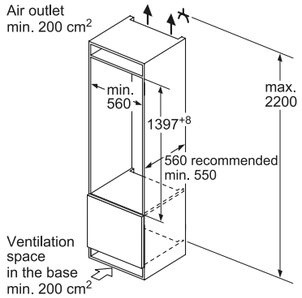

Measurements in mm. The line drawings featured in this brochure are provided as a guide to general dimensions only and are subject to amendment without prior notice.
For full dimensional and installation details please refer to the documentation supplied with the appliance.

Measurements in mm. The line drawings featured in this brochure are provided as a guide to general dimensions only and are subject to amendment without prior notice.
For full dimensional and installation details please refer to the documentation supplied with the appliance.

BUILT-IN SINGLE DOOR FRIDGES & FREEZERS

122CM
KI1413DD0, KI1413FF0, GI7416CE0

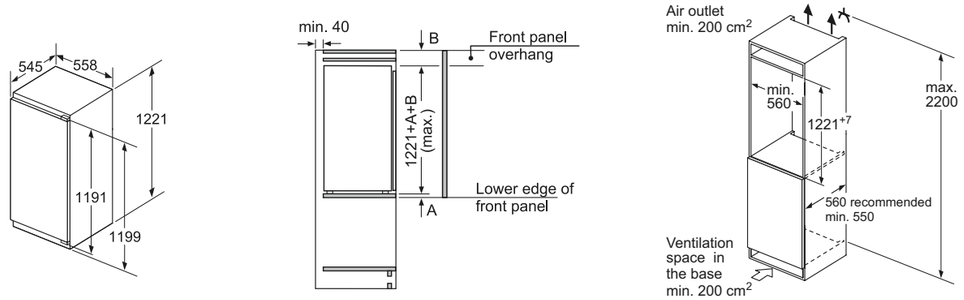

122CM
K1544XSF0

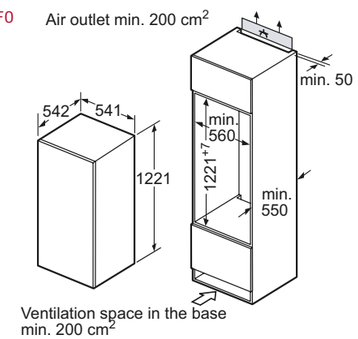

102CM
KI536XFF0

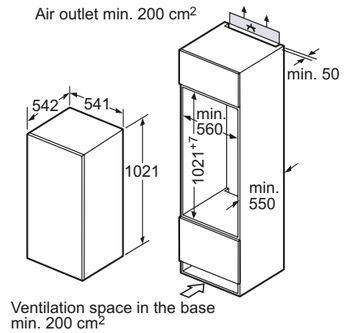

87CM
KI1213F30G, KI1213DD0, GI1216DE0

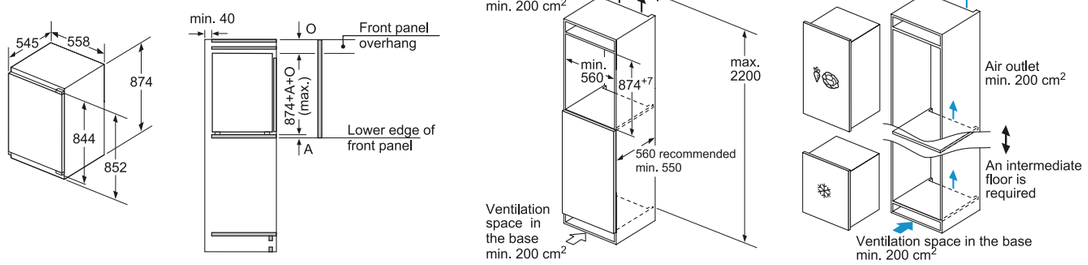

Measurements in mm. The line drawings featured in this brochure are provided as a guide to general dimensions only and are subject to amendment without prior notice.
For full dimensional and installation details please refer to the documentation supplied with the appliance.

BUILT-IN SINGLE DOOR FRIDGES & FREEZERS

87CM
KI514XF0G, GI624SE0G

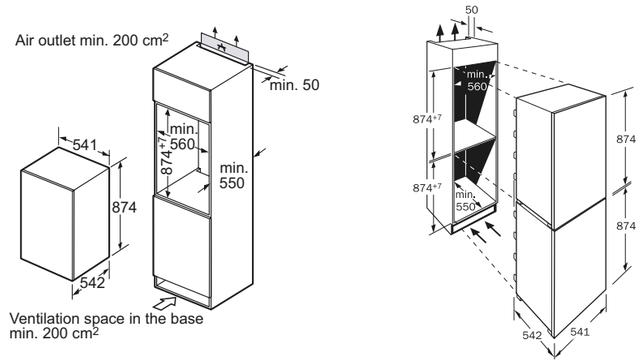

71CM
GI1113FE0

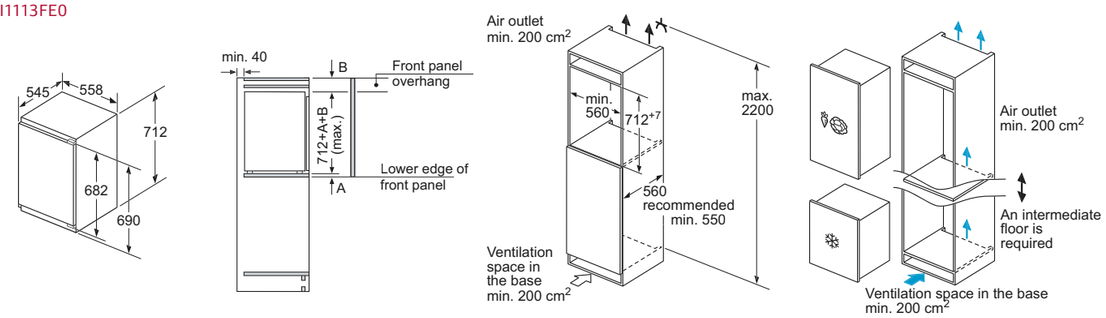

BUILT-UNDER SINGLE DOOR FRIDGE & FREEZERS

K4336XFF0G, K4316XFF0G, G4344XFF0G

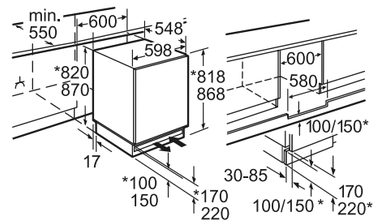

* Variable base/ substructure height

Space for electrical connection next to the appliance on the left or right-hand side.
Ventilation space in the base.

Measurements in mm. The line drawings featured in this brochure are provided as a guide to general dimensions only and are subject to amendment without prior notice.
For full dimensional and installation details please refer to the documentation supplied with the appliance.

FULLY INTEGRATED DISHWASHERS

S517T80D6E, S515T80D1G, S515U80D2G, S513N60X1G, S513K60X1G, S513G60X0G, S511A50X0G, S511A50X1G

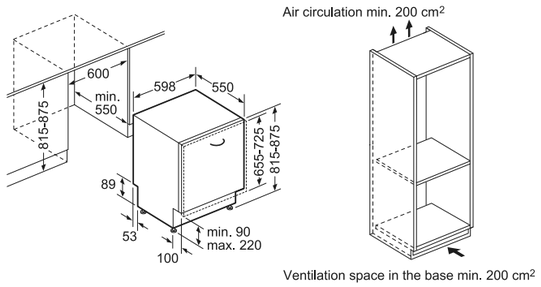

S713N60X1G

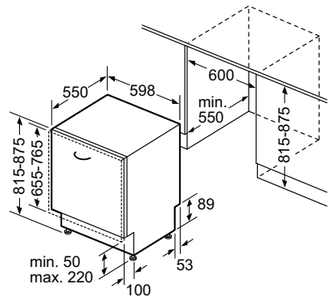

S723N60X1G

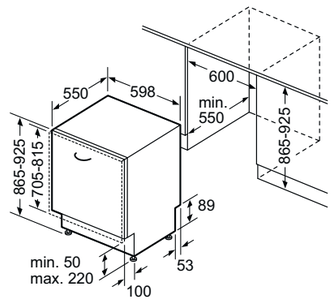

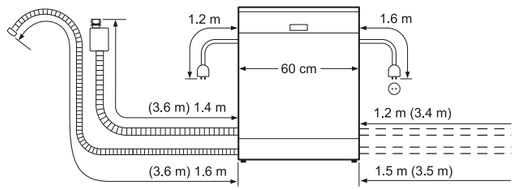

SEMI-INTEGRATED DISHWASHERS

S41E50W1GB, S41E50N1GB, S41E50S1GB

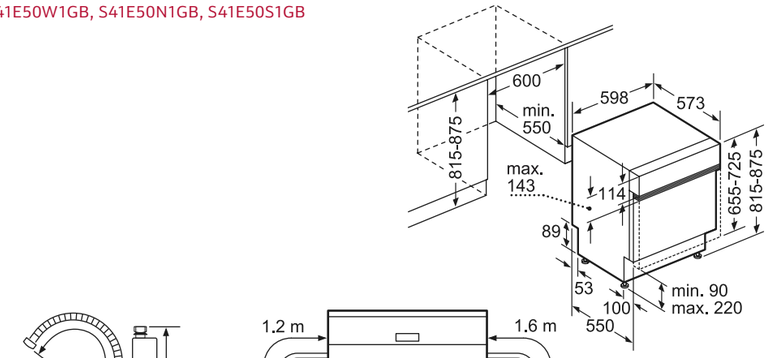

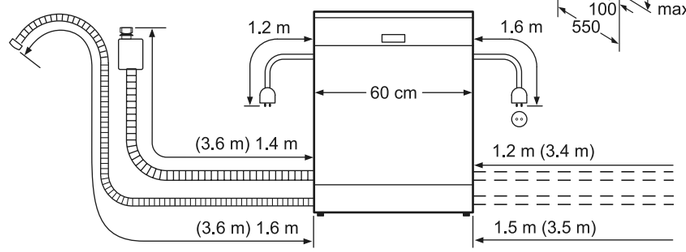

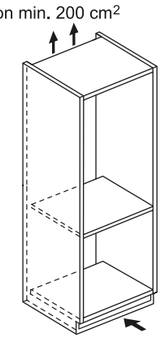

( ) values with extension kit

Ventilation space in the base min. 200 cm²

SLIM LINE DISHWASHERS

S875HKX20G

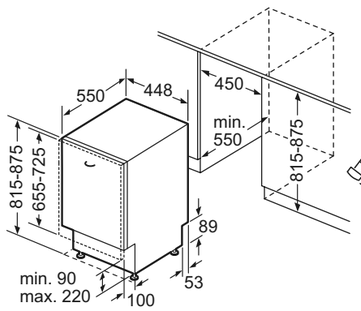

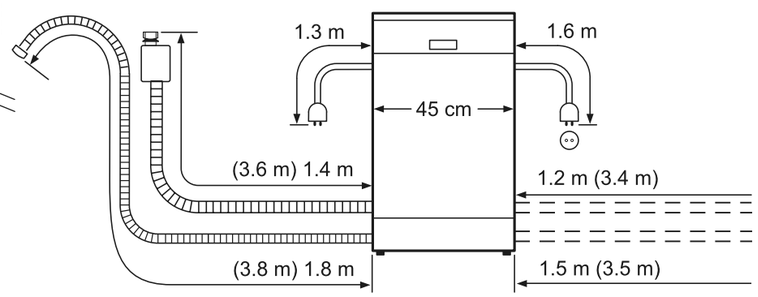

( ) values with extension kit

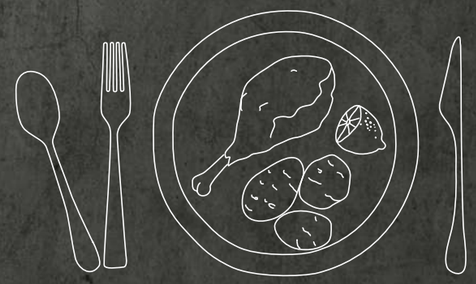

Measurements in mm. The line drawings featured in this brochure are provided as a guide to general dimensions only and are subject to amendment without prior notice.
For full dimensional and installation details please refer to the documentation supplied with the appliance.

Measurements in mm. The line drawings featured in this brochure are provided as a guide to general dimensions only and are subject to amendment without prior notice.
For full dimensional and installation details please refer to the documentation supplied with the appliance.

INTEGRATED LAUNDRY

W544BX1GB,
W543BX1GB

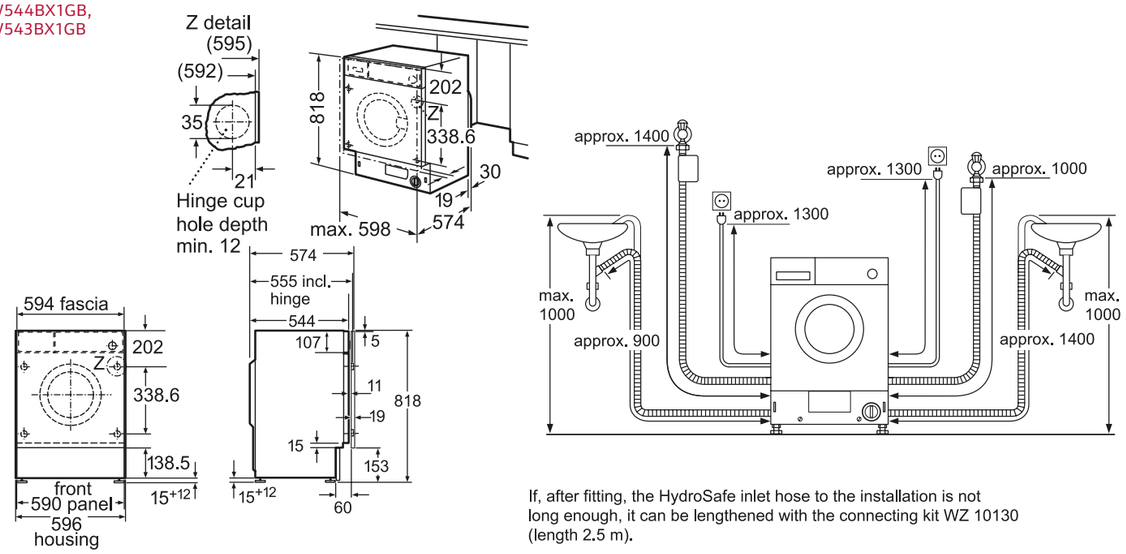

If, after fitting, the HydroSafe inlet hose to the installation is not long enough, it can be lengthened with the connecting kit WZ 10130 (length 2.5 m).

V6540X2GB, V6320X2GB

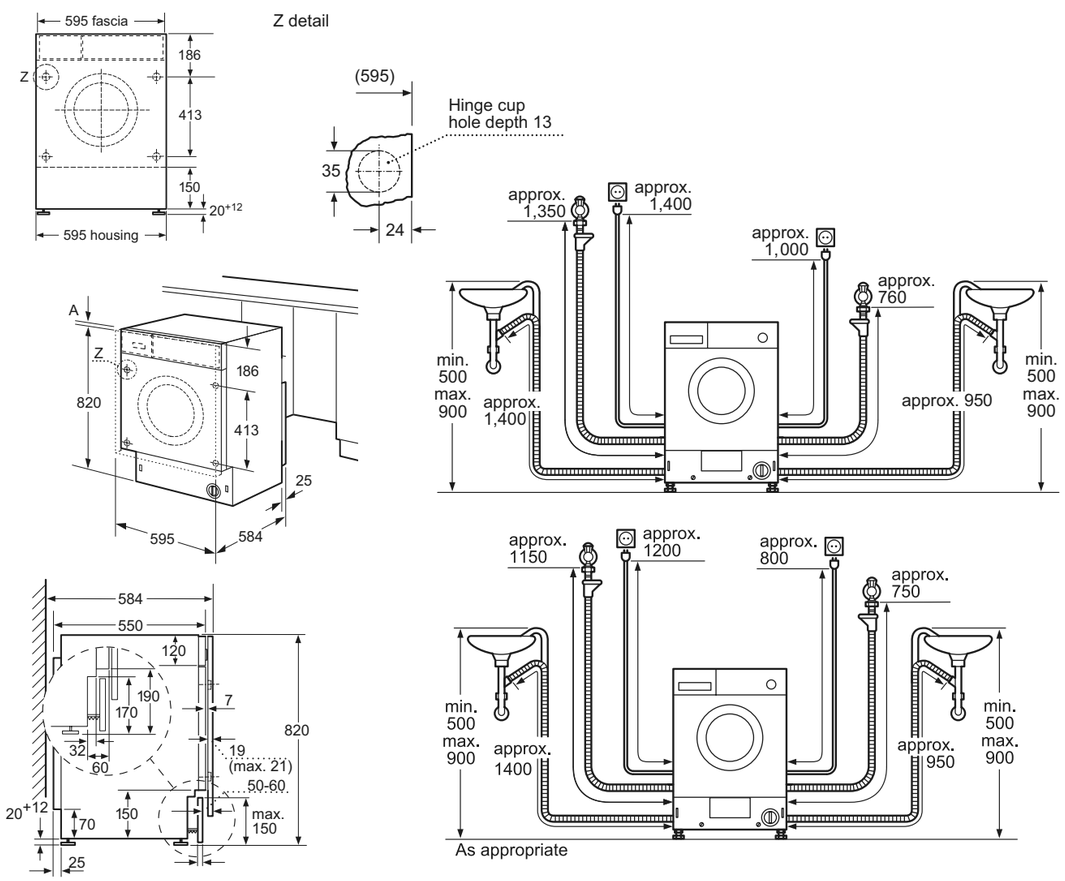

FREESTANDING LAUNDRY

W7460X5GB

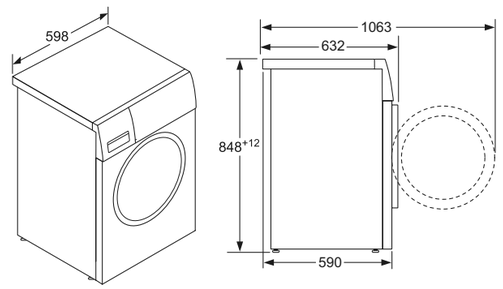

W946UX0GB

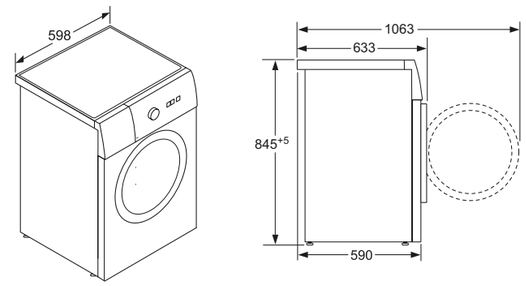

R8580X3GB

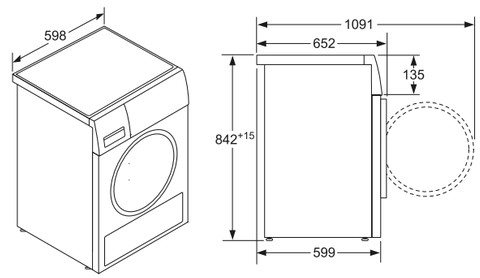

NEFF CUSTOMER SERVICE

Here at NEFF, we understand that although our kitchens and appliances are designed to cope with even the most exacting Cookaholics, sometimes you need to turn to us for help. Whether you need a visit from one of our engineers, some spare parts for your NEFF appliance or just some helpful advice, we're here to talk – around the clock*.

GIVE US A CALL ON

0344 892 8989*

If you're in the Republic of Ireland, call us on **(01) 450 2655**

VISIT OUR WEBSITE AT

WWW.NEFF-HOME.COM/UK

Lines are open 24 hours a day. Customers can book appointments Monday to Friday 08:00am to 20:00pm, Saturday 09:00am to 17:00pm and Sunday 09:00am to 16:00pm. Calls are charged at the basic rate, please check with your telephone service for exact charges.

RECEIVE THE HIGHEST STANDARDS OF SERVICE FROM NEFF

NEFF appliances are well-known for their quality and we believe that our customers deserve customer service to match. You can contact us seven days a week, 24 hours a day for assistance. We provide expert repairs both inside and outside the manufacturer's warranty period and we can offer advice on choosing an appliance which will enhance your favourite dishes.

NEFF is a division of BSH Home Appliances Limited, a company registered in England and Wales under company registration number 01844007, with registered office at: Grand Union House, Old Wolverton Road, Wolverton, Milton Keynes, Buckinghamshire, MK12 5PT.

Register my appliance

REGISTER YOUR APPLIANCE AND WARRANTY

It is important that you register all your kitchen appliances to ensure that the manufacturer has full details in the event of an important product update. You can find out more about registering your appliances at

www.registermyappliance.org.uk

All NEFF appliances are supplied with a two-year manufacturer's warranty. Please call 0800 519 2115 (Republic of Ireland 01230 0344) to register your NEFF warranty and find out more about extending your cover.

SHOP FOR NEFF ACCESSORIES, CLEANING PRODUCTS AND REPLACEMENT SPARE PARTS

Pay a visit to the NEFF online store (www.neff-home.com/uk/store) to find everything you need to enhance and maintain your appliances. From speciality cookware such as NEFF Griddle Pans and Comfort Flex oven rails to cleaning products to keep your appliance looking like new.

Browse products such as cookware specially selected by NEFF or additional options for your oven. You can also find replacement filters and locate and buy genuine replacement spare parts. Our popular range of tested and approved cleaning and care products keep your appliances working at their best and restore a showroom shine. If you need expert assistance, please call us on 0344 892 8989.

ARRANGE A VISIT FROM A NEFF ENGINEER

NEFF appliances are built to the highest standard, but if you do need a visit from a NEFF engineer we are here to help. Our engineers are employed and trained by NEFF* and are based locally around the country. Call today on 0344 892 8989 (Republic of Ireland 01450 2655) or visit our website at www.neff-home.com/uk and click on 'Customer service' in the main menu.

SPARE PARTS, ACCESSORIES AND CLEANING PRODUCTS

Need a replacement spare part or one of our tested and approved accessories to enhance your appliance? Take a look at our range. We also sell cleaning and care products tested and approved by NEFF.

ONLINE HELP AND PRODUCT ADVICE

Our product advisors are available to answer questions you might have about our range of NEFF appliances, whether it's assistance in choosing the right appliance for you, help with appliance features or assistance with the usage and maintenance of your appliance.

REGISTER YOUR APPLIANCE AND WARRANTY

YOU CAN ALSO DISCUSS OPTIONS TO EXTEND YOUR WARRANTY.

NEFF appliances come with a two-year manufacturer's warranty as standard, and you also have options to extend this warranty even further for added peace of mind in the knowledge that NEFF engineers are here to repair any faults. You can register by calling 0800 519 2115 (Republic of Ireland 01230 0344) or by visiting our website at www.neff-home.com/uk and clicking on 'Customer service' in the main menu.

COOKING PASSION SINCE 1877

CREATE. INSPIRE. DELIGHT.

COLOUR ILLUSTRATIONS
Due to variables in photographic and printing processes, all colours in this brochure are subject to deviation from the appliance actually illustrated.

IMPORTANT NOTES
This brochure is current as from the publication date and supersedes all previous brochures for these products. This brochure should not be regarded as an infallible guide nor as an offer for sale of any particular product. Whilst BSH Home Appliances Ltd believes that all information contained within this brochure is correct at the time of going to print, no representation or warranty, express or implied, is or will be made and no responsibility or liability is or will be accepted by BSH Home Appliances Ltd in relation to the accuracy or completeness of this information and any liability is expressly disclaimed. To the extent permitted by law, BSH Home Appliances Ltd expressly excludes: i) all conditions, warranties and other terms which might otherwise be implied by statute, common law or the law of equity and ii) any liability for any direct, indirect or consequential loss or damage (including, without limitation, damages for loss of business or loss of profits) arising in contract, tort or otherwise from the use of or reliance on any information contained within this brochure or from any action or decision taken as a result of such use or reliance. BSH Home Appliances Ltd reserves the right to modify technical data and all other information contained within this brochure without notice. All rights reserved. Due to variables in the reproduction process, colours of actual products may vary slightly from those depicted. We recommend a visit to a NEFF dealer to confirm that specifications and colours are to your satisfaction.

All photography and copy in this brochure are the property of, or under licence to, NEFF and must not be used without prior permission. Please contact the NEFF Marketing Department for assistance.

Slide&Hide®, CircoTherm®, NeffLight®, TwistPad®, FlameSelect®, SeamlessCombination® and TwistPadFire® are trade marks of BSH Home Appliances Limited.

For product specifications please go to neff-home.com/uk/ or ask your local retailer.

NEFF Dealers are not agents of NEFF and therefore have no authority to bind NEFF by any express or implied undertaking or representation.

NEFF Customer Service
Grand Union House
Old Wolverton Road
Milton Keynes
Buckinghamshire
MK12 5ZR

BSH Home Appliances Ltd.
M50 business Park
Ballymount
Dublin 12
T 1890 626 041
www.neff.ie

NEFF, a division of
BSH Home Appliances Ltd.
Grand Union House
Old Wolverton Road
Wolverton
Milton Keynes
MK12 5PT
www.neff-home.com/uk

NF4896 NEFF Appliance
Range Brochure 2020

MIX
Paper from responsible sources
FSC® C020533