SPECIFICATIONS
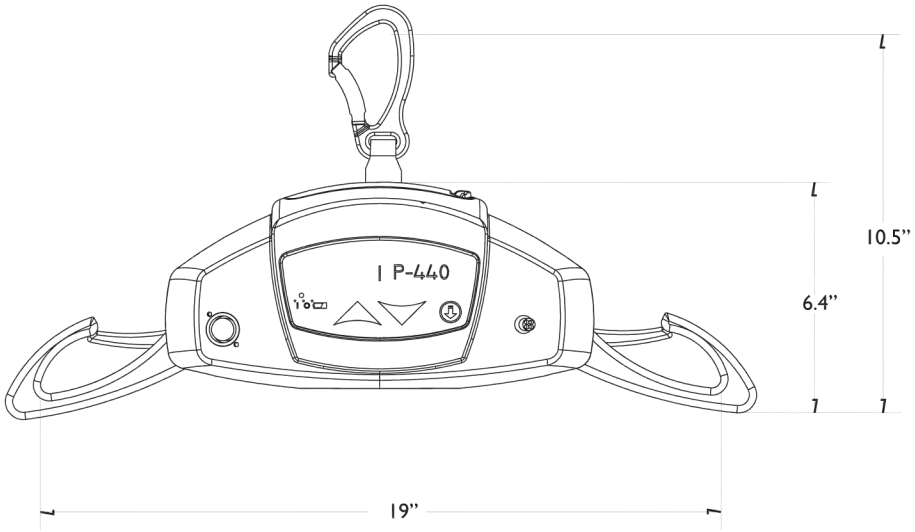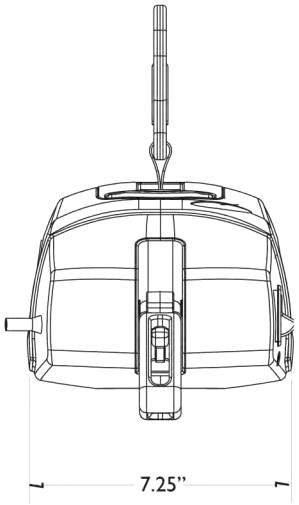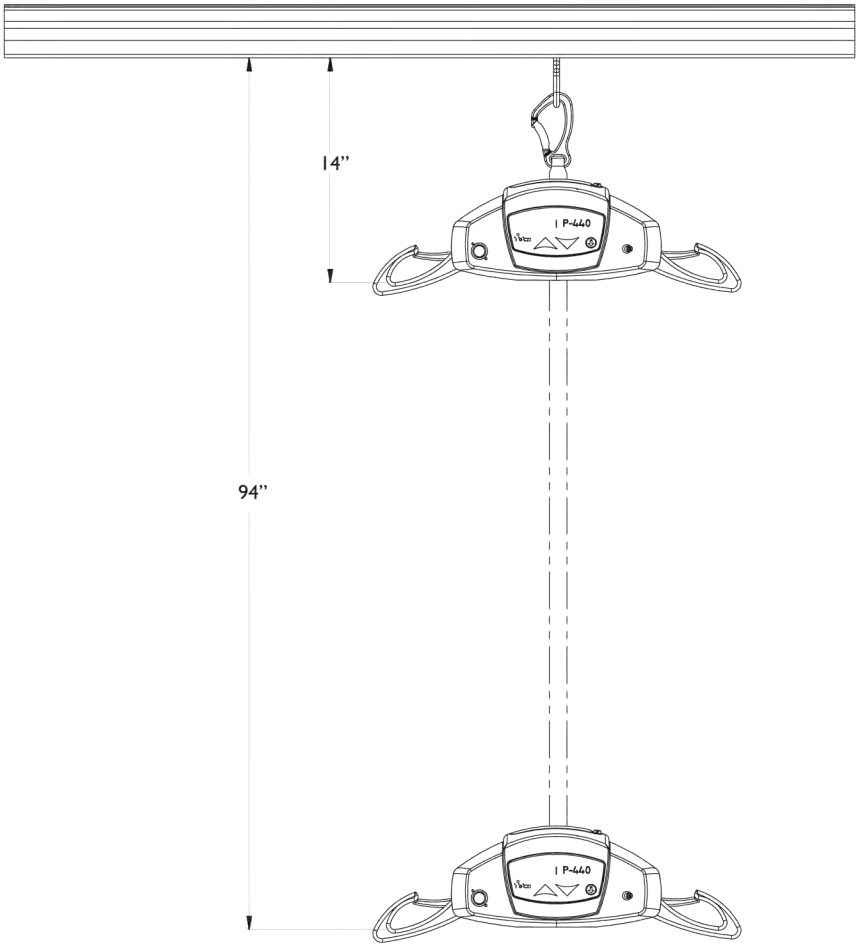
P-440