VIEW6 (1 : 30)

E (1 : 15)

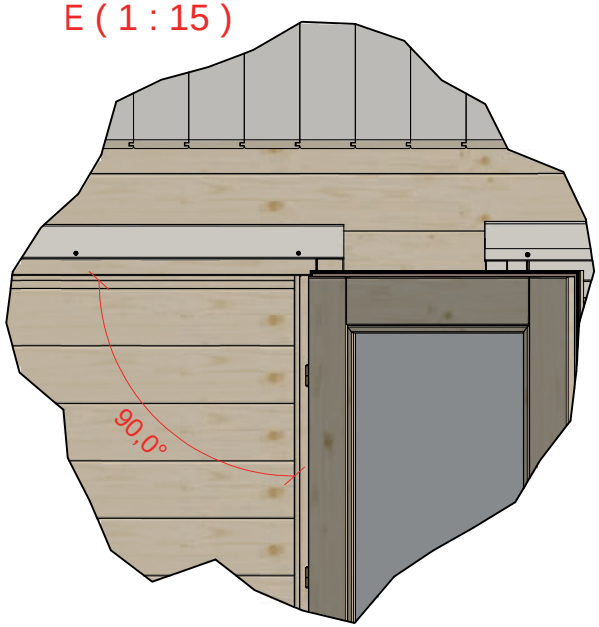

DESIGNED BY	CHECKED BY	APPROVED BY	DATE	Format A4	DATE
Vjatšeslav Žuravljov	Kalju Juurik	Kalju Juurik			26.08.2013

Aadress:Lihula mnt.22b 90510,Haapsalu,Eesti
Tel: + 372 47 22 000,Fax: + 372 47 22 001
E-mail. info@tenekaubandus.ee
www: www.tenekaubandus.ee
Reg.nr:10430670 VATnr:EE100512922
TENE Kaubandus

wall40mm/1425x1955

Langeoog 40-410x410

ISSUE	SHEET
	1 / 3

VIEW4 (1 : 15)

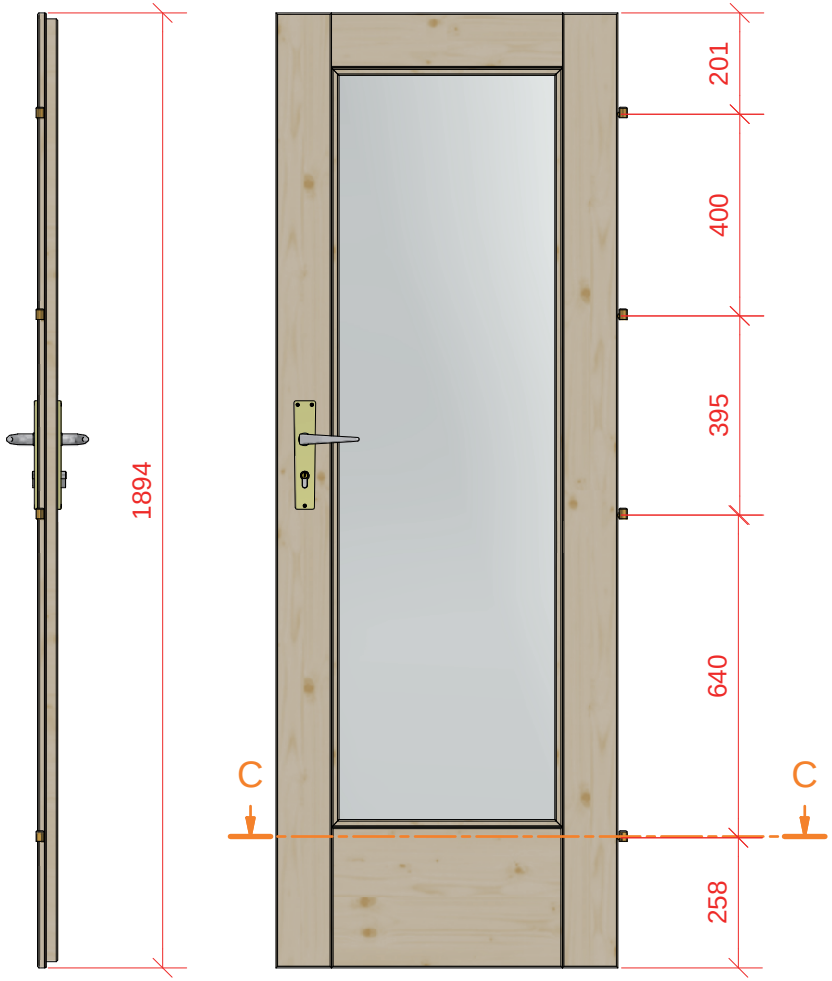

D (1 : 2)

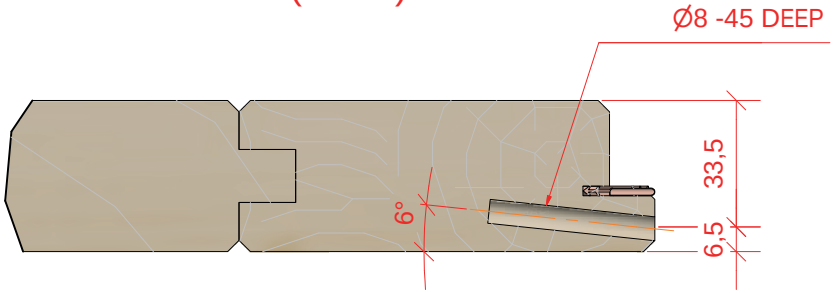

C-C (1 : 15)

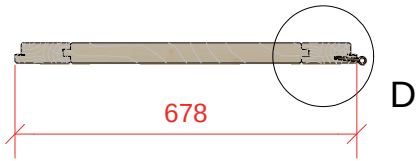

DESIGNED BY	CHECKED BY	APPROVED BY	DATE	Format A4	DATE
Vjatšeslav Žuravljov	Kalju Juurik	Kalju Juurik			26.08.2013

Aadress:Lihula mnt.22b 90510,Haapsalu,Eesti
Tel: + 372 47 22 000,Fax: + 372 47 22 001
E-mail. info@tenekaubandus.ee
www: www.tenekaubandus.ee
Reg.nr:10430670 VATnr:EE100512922
TENE Kaubandus

wall40mm/1425x1955

Langeoog 40-410x410

ISSUE

SHEET 2 / 3

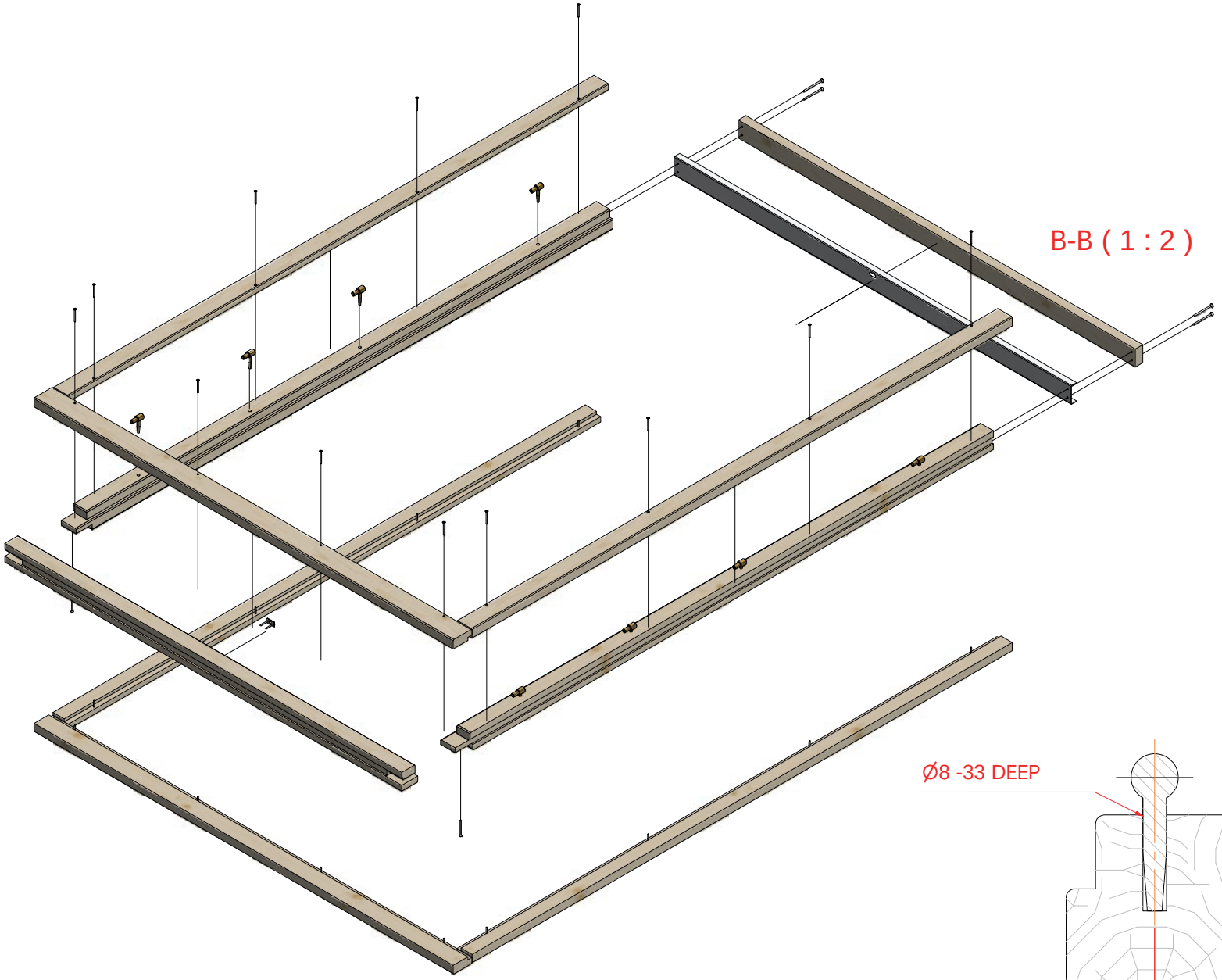

VIEW2 (1 : 15)

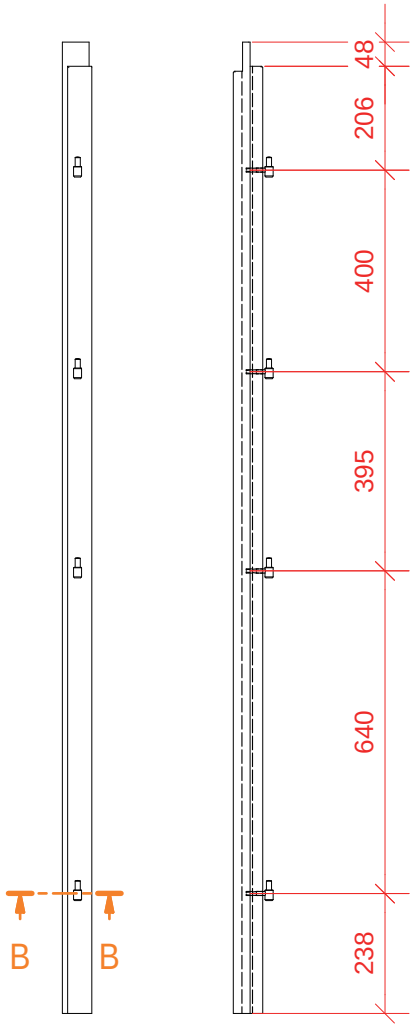

B-B (1 : 2)

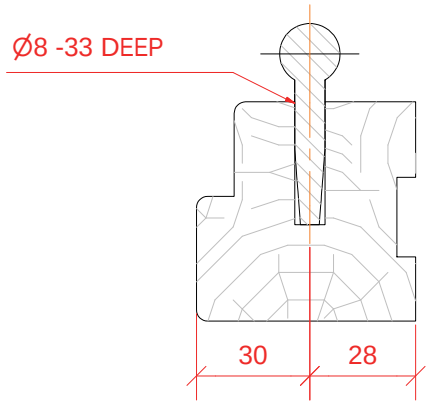

DESIGNED BY	CHECKED BY	APPROVED BY	DATE	Format A4	DATE
Vjatšeslav Žuravljov	Kalju Juurik	Kalju Juurik			26.08.2013

Aadress:Lihula mnt.22b 90510,Haapsalu,Eesti
Tel: + 372 47 22 000,Fax: + 372 47 22 001
E-mail. info@tenekaubandus.ee
www: www.tenekaubandus.ee
Reg.nr:10430670 VATnr:EE100512922
TENE Kaubandus

wall40mm/1425x1955

Langeoog 40-410x410

ISSUE	SHEET
	3 / 3